MITSUBISHI ELECTRIC

Controllers,
Servo Amplifiers
& Motors

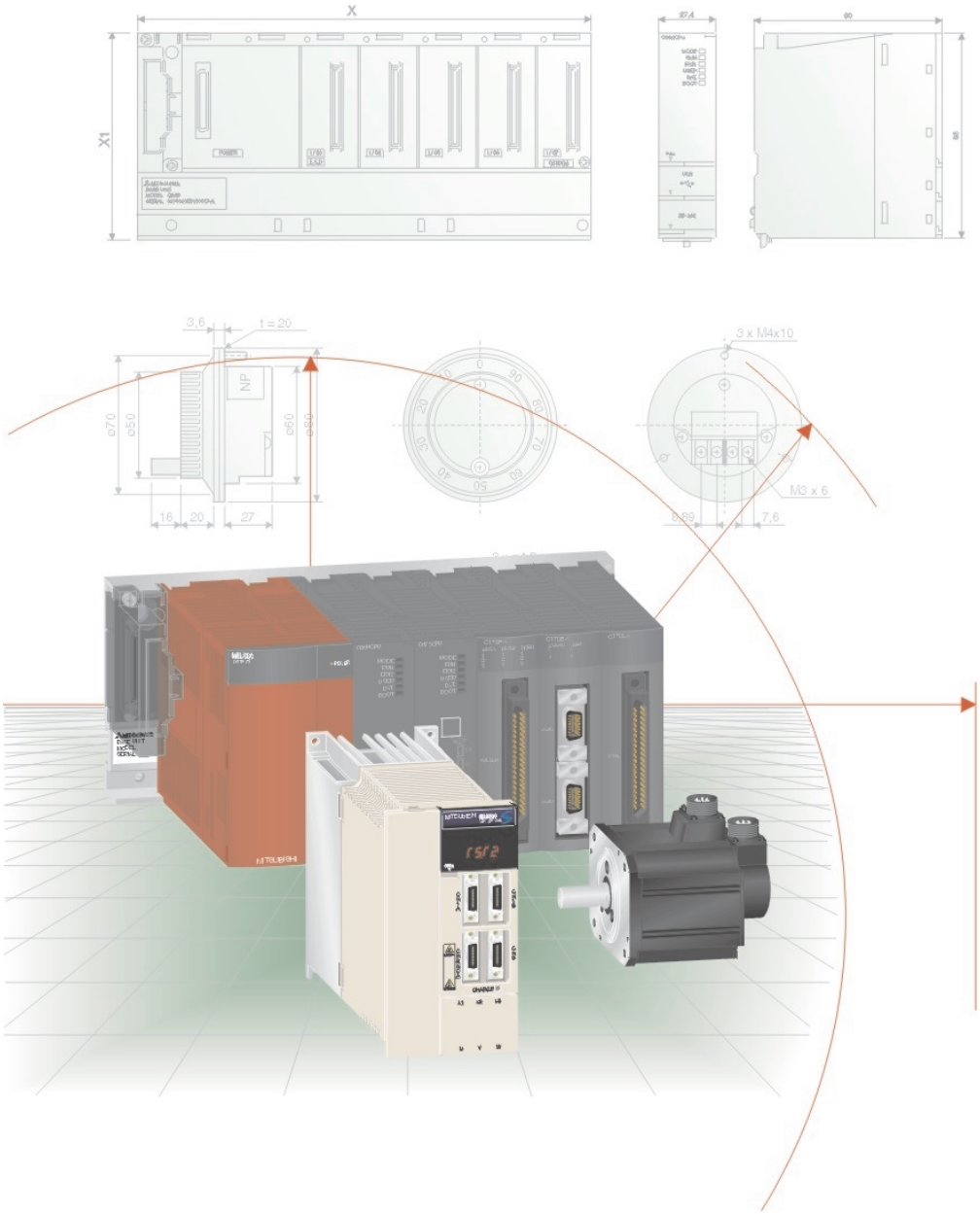

Motion Controller MELSEC System Q

Technical Catalogue

2003

AUDIN - 8, avenue de la malle - 51370 Saint Brice Courcelles - Tel : 03.26.04.20.21 - Fax : 03.26.04.28.20 - Web : http: www.audin.fr - Email : info@audin.fr

Mitsubishi Electric Motion Controllers System Q

MELSEC System Q

PLCopen motion control

Mitsubishi Motion Controllers are integrated in modular fashion in the MELSEC System Q.

The multiprocessor technology of the MELSEC System Q permits PLC CPUs, Motion CPUs and PC CPUs to be used jointly on a common base unit. While the exchange of data via the system bus of the base unit is optimised, space requirements and system costs are also clearly reduced.

Up to 96 axes can be controlled very rapidly in one system via the Mitsubishi SSCNET and without complex wiring.

This reduced wiring requirement and simple connection thanks to "plug-and-play" produces a simple and flexible, but also a powerful movement system.

Further Publications within the Factory Automation Range

Technical Catalogues

Technical Catalogues Servo Amplifiers

Product catalogues for servo amplifiers, motors and accessories of the MELSERVO series

Technical Catalogues Inverters

Product catalogues for frequency inverters, control panels, and accessories

Technical Catalogues PLCs

Product catalogues for programmable logic controllers and accessories for the MELSEC series

Technical Catalogue Networks

Product catalogue for Master and Slave modules as well as accessories for the use of programmable logic controllers in open networks and MELSEC networks

Technical Catalogue HMI

Product catalogue for operator terminals, process visualisation and programming software as well as accessories

Additional Services

You will find current information on updates, alterations, new items, and technical support on MITSUBISHI ELECTRIC's web pages (www.mitsubishi-automation.com).

The products section of the MITSUBISHI home site includes various documentations of the whole product range by MITSUBISHI ELECTRIC as well as the current version of this catalogue on hand. All manuals and catalogues can be downloaded. The content is updated daily and to date is provided in English and German.

About this catalogue

Due to the constantly growing product range, technical alteration, and new or changed characteristical features, this catalogue is updated frequently.

Texts, figures and diagrams shown in this product catalogue are intended exclusively for explanation and assistance in planning and ordering the motion controllers and the associated accessories. Only the manuals supplied with the units are relevant for installation, commissioning and handling of the units and the accessories. The information given in these documentations must be read before installation and commissioning of the units or software.

Should questions arise with regard to the planning of modules described in this product catalogue, do not hesitate to contact the German branch of MITSUBISHI ELECTRIC EUROPE B.V. in Ratingen or one of its distributors (see cover page).

© MITSUBISHI ELECTRIC EUROPE B.V. 04/2003 (2nd edition)

AUDIN - 8, avenue de la malle - 51370 Saint Brice Courcelles - Tel : 03.26.04.20.21 - Fax : 03.26.04.28.20 - Web : http: www.audin.fr - Email : info@audin.fr

Q MOTION CONTROLLER

SYSTEM DESCRIPTION

- Introduction to Mitsubishi Motion Control 4
- System components and combination possibilities 5
- System configuration (overview on an 8 axis system) 6
- System configuration (overview on an 32 axis system) 7

BASIC COMPONENTS

- Overview on hardware components and accessories 8
- Motion Controller CPUs 10
- System modules 12
- Overview on servo amplifiers and motors 15

SOFTWARE

- Programming the Motion Controllers 16
- Software package description 17
- Application of the programming environments 18
- Applied programming 20
- Screenshots of the different software packages 22

ACCESSORIES

- Dividing unit, battery unit and connection cables 24
- SSCNET cables, connectors 25
- Manual pulse generator, serial absolute synchronous encoder 25

DIMENSIONS

- CPUs and system modules 26
- Serial absolute synchronous encoder 27
- Manual pulse generator 27

APPENDIX

- Planning aid 28
- Order form 30
- Index 31

AUDIN - 8, avenue de la malle - 51370 Saint Brice Courcelles - Tel : 03.26.04.20.21 - Fax : 03.26.04.28.20 - Web : http: www.audin.fr - Email : info@audin.fr

Mitsubishi Motion Control

Motion control systems geared to the needs of your specific application

Mitsubishi Motion Controllers are integrated in a modular fashion in the MELSEC System Q.

While up to 3 Motion CPUs control the movements via the max. 96 connected MR-J2S-□B series servo amplifiers and HC-xxx□□ series motors, all modules of the System Q, including network connections, are available to the Q CPU. The user is provided with a broad spectrum of applications by distributing the actuation tasks to several different CPU modules, which automatically and cyclically exchange data via the system bus of the base unit.

Motion controllers can tap huge performance reserves for optimising production processes and improving product quality.

Today, motion controller systems play a dominant role in machine tools, printing and paper processing machines, modern packaging machines, filling and canning machines in the food industry, grinding, polishing and engraving machines, X-Y-Z indexing tables and many automation and handling systems in semiconductor production lines.

Mitsubishi motion controllers can control 8 (Q172CPUN) or even up to 32 servo axes (Q173CPUN) simultaneously.

The Motion network: SSCNET

SSCNET (**S**ervo **S**ystem **C**ontroller **NET**work) is a high-speed synchronous serial communication network that delivers better performance and more reliability than conventional control networks. SSCNET supports batch control of up to 96 axes and fast and simple connections with one-touch bus cabling. The bus cycle time is only 0.8 ms.

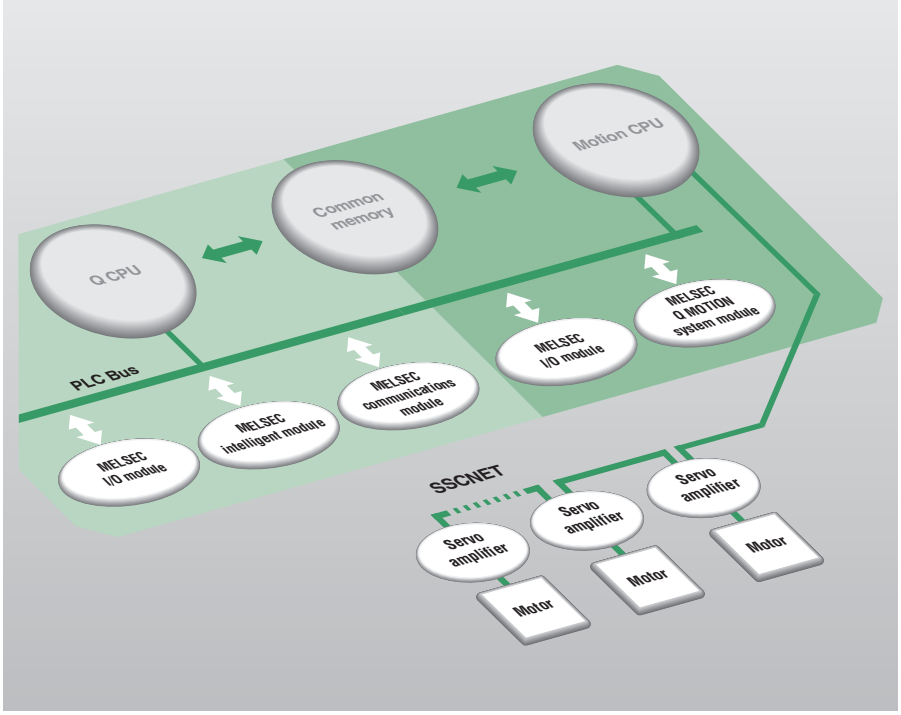

Powerful programming environment and programming tools

A powerful, Windows-based programming environment ensures a fast learning curve for new users, despite the power and complexity of the system.

The comprehensive range of standardised software tools cuts programming time. All parameters and settings are configured with a standard software package; no separate servo setup software is required!

The motion controller and its associated servo drives and motors are also configured directly on the computer screen. The individual combinations of system components are checked through automatically and any errors are signalled immediately, thus eliminating the possibility of system crashes!

Mitsubishi Electric's specially-developed SFC sequential function chart language isolates the system's multitasking operation from external influences. This means drastically faster servo amp response times and ultra-short movement cycles.

Mitsubishi motion controllers can synchronise up to 96 axes simultaneously. Programming is performed quickly and efficiently online with a Virtual Mechanical Editor. Mechanical master shafts, clutches and gears can be replaced by more efficient electronic versions. And you can forget about time-consuming text programming!

Complex mechanical processes can be solved with graphical cam disks (CAM).

The logic of the Q CPU motion controller is programmed in instruction list (IL), ladder diagram (LD), function block diagram (FBD) or in IEC 1131.3-compatible structured text.

System configuration (see figure on the right)

- A Motion CPU cannot be operated alone in a multi CPU system, but rather only in conjunction with a Q CPU.
- A max. of any 4 CPU modules can be combined in a multi CPU system. A maximum of 3 motion CPUs can therefore be operated in one system.
- Encoders and external signals are sent to the Motion CPU via the Q172LX, Q172EX and Q173PX motion system modules.
- A Motion CPU can address 256 digital inputs and outputs, and process the 16 inputs of a QI60 Interrupt module for the purposes of program control.
- Batch control of 50 W – 7 kW servo motors is possible in combination with the MR-J2-B servo amps in an SSCNET communications network. (Q172CPUN: max. 8 axes, Q173CPUN: max. 32 axes).

AUDIN - 8, avenue de la malle - 51370 Saint Brice Courcelles - Tel : 03.26.04.20.21 - Fax : 03.26.04.28.20 - Web : http: www.audin.fr - Email : info@audin.fr

System Components and Combinations Possibilities

Multi processor technology

- A Motion CPU cannot be operated alone in a multi CPU system, but rather only in conjunction with a Q CPU.
- A main base unit accommodates up to 4 CPU modules. A maximum of 3 Motion CPU modules can therefore be operated in one system.
- The first CPU on a base unit must always be a Q CPU.

Extension base units

- Up to 7 extension base units can be connected to the main base unit via expansion cables.
- Q Motion system modules, encoders and hand wheels can be integrated.
- Only one Motion CPU can access the Q172LX, Q172EX and Q173PX Motion system modules. These modules can be mounted at any desired location on the main or extension base unit.
- There is a limit to the number of Q Motion system modules, encoders and hand wheels which can be assigned to a Motion CPU.

I/O modules

- One Motion CPU can address 256 digital inputs and outputs, thereby accessing System Q input/output modules.

Components	Max. number per module	
	Q172CPUN	Q173CPUN
Manual pulse generator (MR-HDP01)	3	3
Serial encoder (absolute synchronous and incremental encoder)	8	12
Q172LX (servo external signals interface module)	1	4
Q172EX (serial absolute synchronous encoder interface module)	4	6
Q173PX (manual pulse generator interface module)	3	4

- A QI60 Interrupt module (16 inputs) can be assigned to a motion CPU in order to control the execution of programs.

Special function modules

A Motion CPU cannot access special function modules or network modules (except analog modules).

External battery for Motion CPU modules

The positioning data, parameters and SFC and servo programs are protected against data loss for a brief period by the integrated battery in the event of a power supply voltage failure. An external battery must be connected to the Motion CPU, if the power supply is switched off for an application for more than 200 hours (approx. 8 days).

The optional external battery should therefore always be provided for extended operational interruptions.

Combination possibilities

Certain combinations are possible for the selection and use of the CPUs. The combination possibilities can be found in the opposite tables.

Some of the CPUs can be used as a master or as a slave CPU, however the master CPU must always be plugged as the first CPU next to the mains adapter to the far left.

Combined with other CPUs the PC CPU must be positioned to the far right slot.

Depending on the CPUs used the power supply capacity must be accounted for accordingly.

	Multi processor PLC CPUs	Motion CPUs	PC CPUs
CPU types	Q02CPU Q02HCPU Q06HCPU Q12HCPU Q25HCPU	Q172CPUN Q173CPUN	PPC-CPU686(MS)-64 PPC-CPU686(MS)-128
Combination possibilities	Up to 4 CPUs can be combined	In combination with a PLC CPU as Master	As Master single use only, as Slave in combination with a PLC CPU as Master
Max. number usable CPUs per system	Max. 4	Max. 3	Max. 1
Application (hierarchy)	Master/slave	Slave	Master/slave

AUDIN - 8, avenue de la malle - 51370 Saint Brice Courcelles - Tel : 03.26.04.20.21 - Fax : 03.26.04.28.20 - Web : http: www.audin.fr - Email : info@audin.fr

System Configuration (8 Axis System with Q172CPUN)

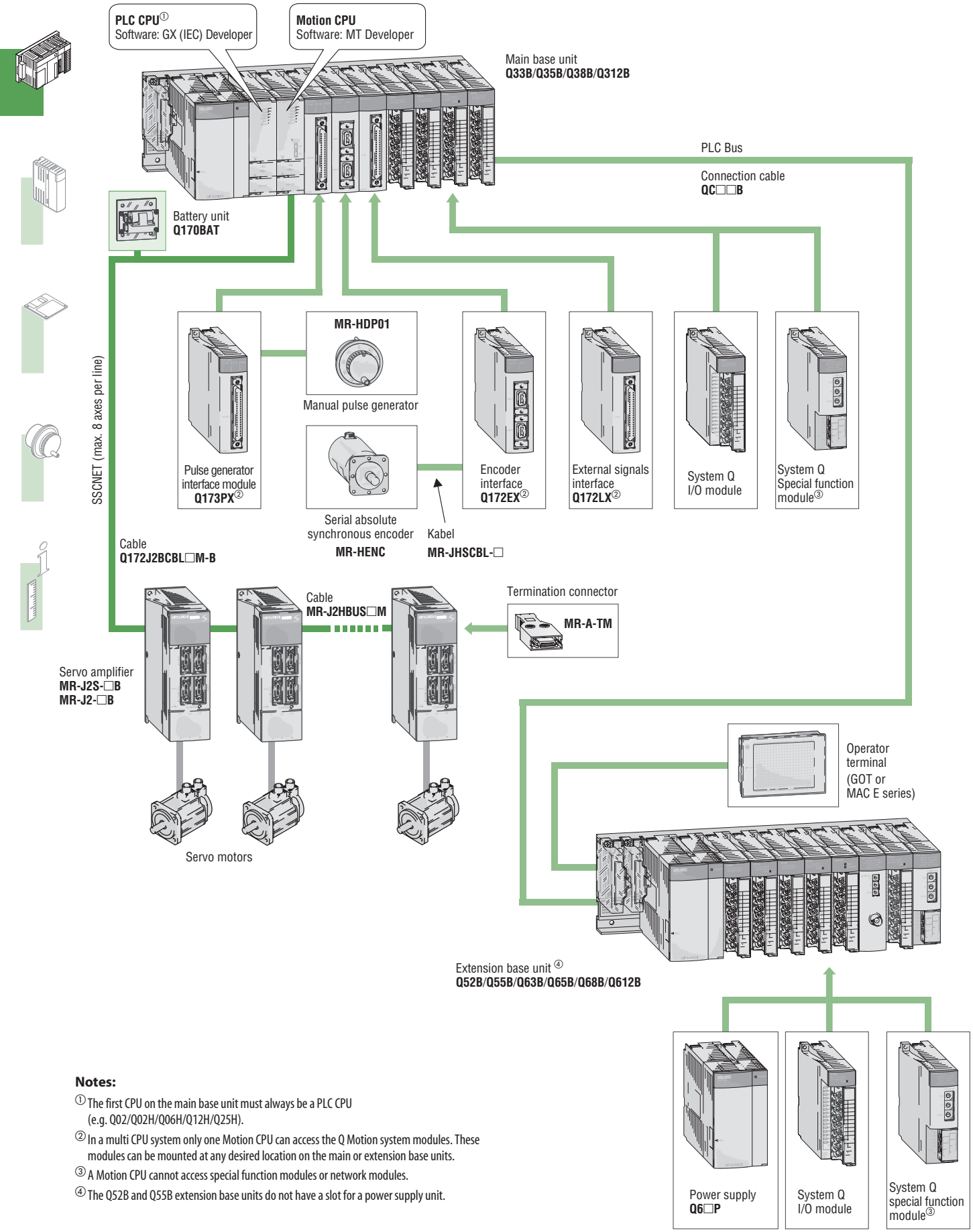

Notes:

① The first CPU on the main base unit must always be a PLC CPU (e.g. Q02/Q02H/Q06H/Q12H/Q25H).

② In a multi CPU system only one Motion CPU can access the Q Motion system modules. These modules can be mounted at any desired location on the main or extension base units.

③ A Motion CPU cannot access special function modules or network modules.

④ The Q52B and Q55B extension base units do not have a slot for a power supply unit.

AUDIN - 8, avenue de la malle - 51370 Saint Brice Courcelles - Tel : 03.26.04.20.21 - Fax : 03.26.04.28.20 - Web : http: www.audin.fr - Email : info@audin.fr

System Configuration (32 Axis System with Q173CPUN)

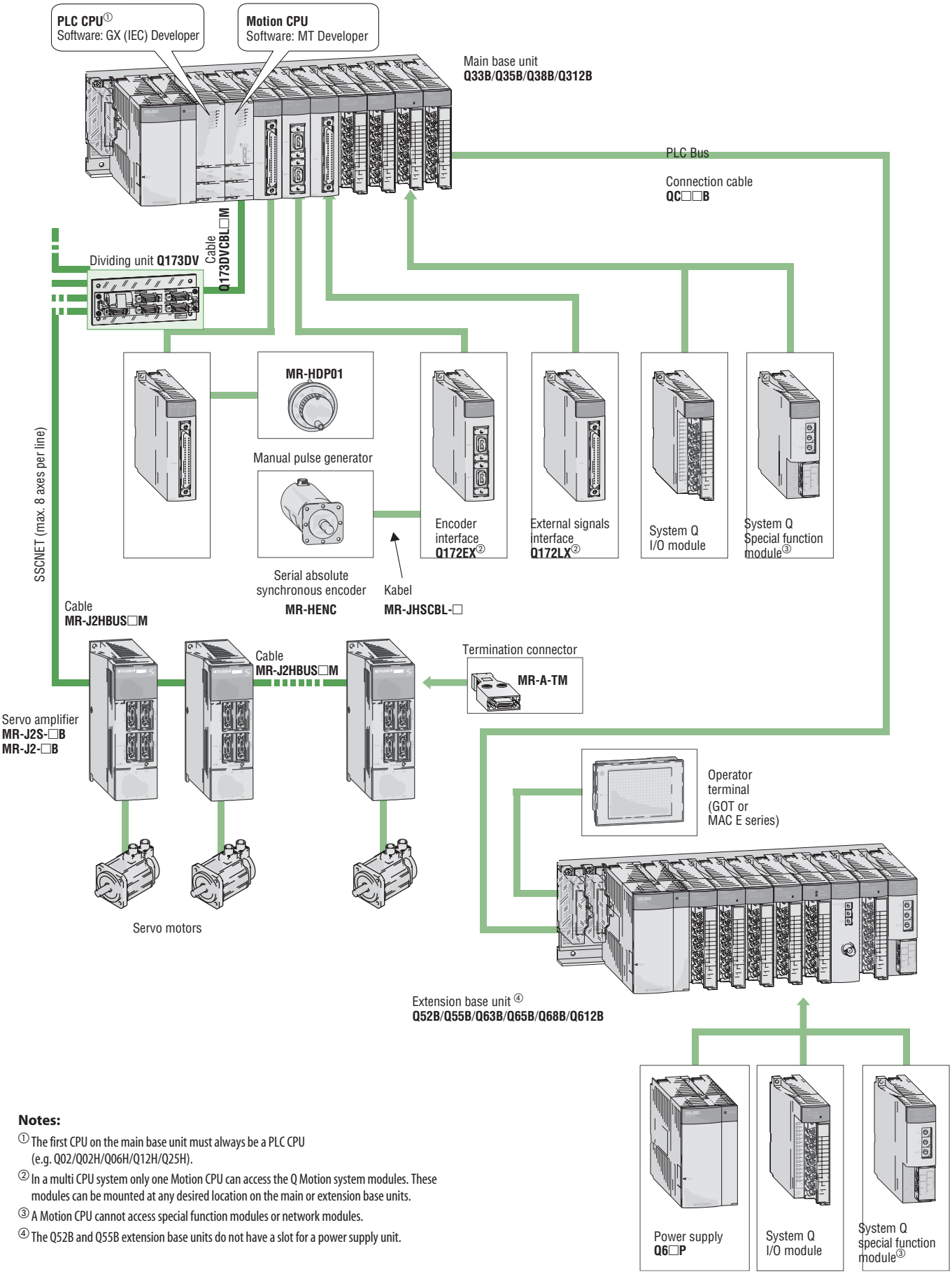

Notes:

① The first CPU on the main base unit must always be a PLC CPU (e.g. Q02/Q02H/Q06H/Q12H/Q25H).

② In a multi CPU system only one Motion CPU can access the Q Motion system modules. These modules can be mounted at any desired location on the main or extension base units.

③ A Motion CPU cannot access special function modules or network modules.

④ The Q52B and Q55B extension base units do not have a slot for a power supply unit.

AUDIN - 8, avenue de la malle - 51370 Saint Brice Courcelles - Tel : 03.26.04.20.21 - Fax : 03.26.04.28.20 - Web : http: www.audin.fr - Email : info@audin.fr

Overview on Hardware Components

The System Q has the multiple CPU system function which also permits PLC CPUs, Motion CPUs and PC CPUs to be loaded together on one base unit.

A Motion CPU can use the SSCNET that rapidly controls up to 96 axes in a single system and saves wiring. The personal computer CPU (Q-PC) enables the access to I/O modules and intelligent function modules and the communication of all CPUs with each other.

The entire range of System Q modules is available by means of the combined use of the Q Motion CPUs with the CPUs of the MELSEC System Q. The table below contains an overview of the available System Q modules and the appropriate accessories.

Further details can be obtained from the System Q technical catalogue.

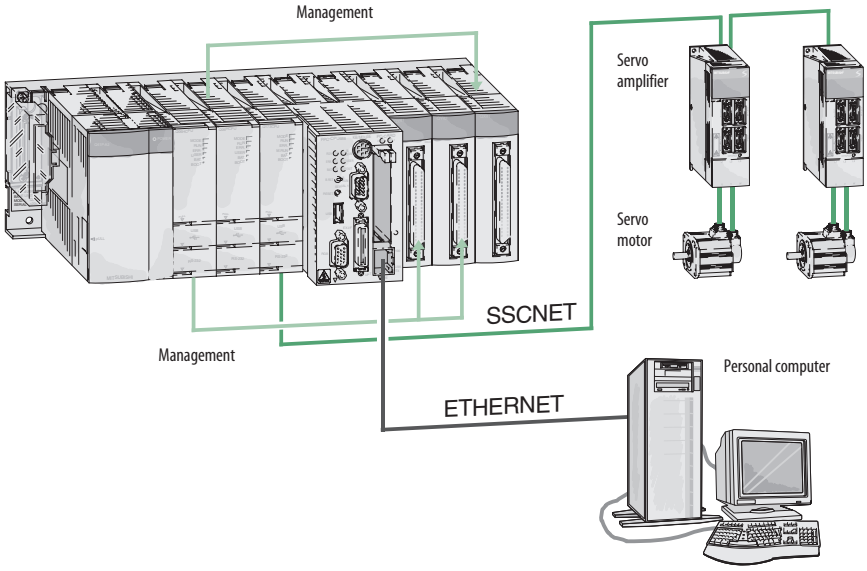

Item	Type	Description		Certification	Art. no.
MELSEC System Q PLC CPU modules	Q02CPU	Sequence program capacity PLC inputs/outputs Processing speed/log. instruction	Max. 28 k steps Max. 4096/8192 79 ns	UL/cUL, CE	132561
	Q02HCPU	Sequence program capacity PLC inputs/outputs Processing speed/log. instruction	Max. 28 k steps Max. 4096/8192 34 ns		127585
	Q06HCPU	Sequence program capacity PLC inputs/outputs Processing speed/log. instruction	Max. 60 k steps Max. 4096/8192 34 ns		130216
	Q12HCPU	Sequence program capacity PLC inputs/outputs Processing speed/log. instruction	Max. 124 k steps Max. 4096/8192 34 ns		130217
	Q25HCPU	Sequence program capacity PLC inputs/outputs Processing speed/log. instruction	Max. 252 k steps Max. 4096/8192 34 ns		130218
MELSEC System Q main base unit	Q33B	For power supply, Q CPU and 3 other modules		UL/cUL	136369
	Q35B	For power supply, Q CPU and 5 other modules			127586
	Q38B	For power supply, Q CPU and 8 other modules			127624
	Q312B	For power supply, Q CPU and 12 other modules			129566
MELSEC System Q extension base unit	Q52B	2 module slots	Without power supply; for the connection use cable QC05B	UL/cUL	140376
	Q55B	5 module slots			140377
	Q63B	For power supply and 3 modules			136370
	Q65B	For power supply and 5 modules			129572
	Q68B	For power supply and 8 modules			129578
	Q612B	For power supply and 12 modules			129579
MELSEC System Q extension cable for base units	QC05B	Length: 0,45 m		UL/cUL	140380
	QC06B	Length: 0,6 m			129591
	QC12B	Length: 1,2 m			129642
	QC30B	Length: 3,0 m			129643
	QC50B	Length: 5,0 m			129644
	QC100B	Length: 10,0 m			129645

AUDIN - 8, avenue de la malle - 51370 Saint Brice Courcelles - Tel : 03.26.04.20.21 - Fax : 03.26.04.28.20 - Web : http: www.audin.fr - Email : info@audin.fr

Item	Type	Description	Certification	Art. no.
MELSEC System Q Power supply modules	Q61P-A2	Input: 200 to 240 V AC, output: 5 V DC / 6 A	UL/cUL, CE	127593
	Q62P	Input: 100 to 240 V AC, output: 5 V DC / 3 A and 24 V DC / 0,6 A	UL/cUL, CE	140379
	Q63P	Input: 24 V DC, output: 5 V DC / 6 A	UL/cUL, CE	136371
	Q64P	Input: 100 to 240 V AC, output: 5 V DC / 8,5 A	CE	140718
MELSEC System Q I/O modules		For detailed informations please refer to the Technical Catalogue MELSEC System Q		—
MELSEC System Q special function modules		For detailed informations please refer to the Technical Catalogue MELSEC System Q; in a multi CPU system special function modules are asigned to the Q CPU.		—
MELSEC System Q network modules		For detailed informations please refer to the Technical Catalogue Networks; in a multi CPU system network modules are asigned to the Q CPU.		—
Programming cable (for RS232 or USB interface)		Please refer to the Technical Catalogue MELSEC System Q		
MELSEC System Q motion controller CPUs	Q172CPUN	Max. 8 axes control	UL/cUL, CE	142695
	Q173CPUN	Max. 32 axes control		142696
MELSEC System Q motion controller system modules	Q172LX	Servo external signals interface modules For the connection of the signals of 8 axes. For each axis the following signals can be detected: Limit switch signals for max. and min. travel, one stop switch, and one machine zero or one signal for toggling from speed to position control.	UL/cUL, CE	140583
	Q172EX	Interface module for 2 serial absolute synchronous encoder MR-HENC	UL/cUL, CE	140584
	Q173PX	Input module for 3 manual pulse generators MR-HDP01 or synchronous encoders	UL/cUL, CE	140585
SSCNET dividing unit with battery insert for Q173CPUN	Q173DV	The dividing unit serves as interface multiplier on the Q173CPUN for the connection of up to 4 SSCNET lines with 8 axes each. With holding device for the battery MRBAT		140586
Connection cable for Q173CPUN and Q173DV	Q173DVCBL05M	For the connection between the Motion CPU and the dividing unit, length 0.5 m		140587
	Q173DVCBL1M	For the connection between the Motion CPU and the dividing unit, length 1 m		140588
Battery adapter for Q172CPUN	Q170BAT	External holding device for the battery MRBAT		142204
SSCNET bus cable for Q170BAT and MR-J2S-B	Q172J2BCBL05M-B	For the connection between Q172CPUN and servo amplifier, with connection for the battery adapter Q170BAT	lenght 0.5 m	142206
	Q172J2BCBL1M-B		length 1 m	142207
	Q172J2BCBL5M-B		length 5 m	142205
Battery for Q173DV and Q170BAT	MR-BAT	Back-up battery for the absolute position detection of the Motion CPU		103862
Manual pulse generator for Motion controller	MR-HDP01	Electronic manual pulse generator / incremental set value generator 25 pulses/revolution, max. allowable speed: 200 r/min; power supply: 5 V DC		128728
Synchroneous encoder for Motion controller	MR-HENC	Resolution: 16384 pulses/revolution, max. allowable speed: 4300 r/min		138304
Encoder cable	MR-JHSCBL□M	Connection betwen the encoders MR-HENC and the Q172EX module, available length: 2 m, 5 m, 10 m, 20 m, 30 m (for further details please refer to the MR-J2S series Technical Catalogue.)		—
SSCNET bus cable for MR-J2S	MR-J2HBUS□M	Connection between the servo amplifiers one below the other, available length: 0.5 m, 1 m and 5 m (for further details please refer to the MR-J2S series Technical Catalogue.)		—
SSCNET termination connector	MR-A-TM	Connected to the last servo amplifier by SSCNET		70004
PCMCIA SSCNET interface card	A30CD-PCF	PCMCIA card (type II) for notebooks with one channel		131237
Connection cable for PCMCIA card	Q170CDCBL3M	Connection between A30CD-PCF and Q172CPUN/Q173CPUN	length 3 m	140570
	Q170CDCBL5M		length 5 m	140576
	Q170CDCBL10M		length 10 m	140582
ISA SSCNET interface board	A30BD-PCF	ISA Bus board for PC with 2 channels		134153
Connection cable for ISA board	Q170BDCBL3M	Connection between A30BD-PCF and Q172CPUN/Q173CPUN	length 3 m	140570
	Q170BDCBL5M		length 5 m	140576
	Q170BDCBL10M		length 10 m	140582

AUDIN - 8, avenue de la malle - 51370 Saint Brice Courcelles - Tel : 03.26.04.20.21 - Fax : 03.26.04.28.20 - Web : http: www.audin.fr - Email : info@audin.fr

Motion Controller CPUs

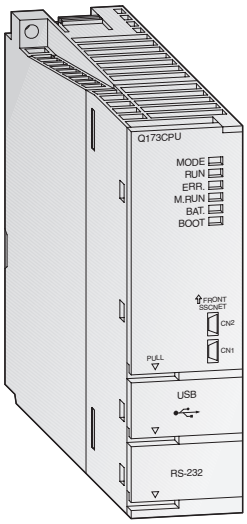

The high-speed dynamic motion CPU

The motion controller CPU controls and synchronizes the connected servo amplifiers and servo motors. A motion system besides the controller CPU as well includes a PLC CPU. Only after combining a highly dynamic positioning control and a PLC an innovative and autarkical motion control system is created.

While the Motion CPU controls large-scale servo movements the PLC CPU is responsible for the machine control and the communication.

Special features:

- Using multiple CPUs to distribute the load improves the overall performance of the whole system
- Use of up to 3 motion CPUs within one system
- Large scale control system for up to 96 axes per system
- Interpolation of 4 axes simultaneously
- Software cam control
- Virtual and real master axes
- Integration in the high-speed SSCNET network for communication with high-performance servo amplifiers at up to 5.6 Mbit/s

Specifications		Q172CPUN	Q173CPUN
Type		Motion CPU	Motion CPU
Input/output points		8192	8192
Number of control axes		8	32
Interpolation functions		Linear interpolation for up to 4 axes, circular interpolation for 2 axes, helical interpolation for 3 axes	
Positioning	control modes	PTP (Point to Point), speed control/speed positioning control, fixed pitch feed, constant speed control, position follow-up control, speed switching control, high-speed oscillation control, synchronous control (SV22)	
	acceleration/ deceleration	Automatic trapezoidal acceleration/deceleration; S-curve acceleration/deceleration	
	compensation	Backlash compensation; electronic gear	
Programming language		Motion SFC, software conveyor assembly (SV13), virtual mechanical support language (SV22)	
Program capacity		14 k steps	
Number of positioning points		3200	
Interface		USB, RS232C, SSCNET	
Real I/O points (PX/PY)		256 (these I/Os can be directly assigned to the Motion CPU.)	
Internal current consumption (5 V DC)	A	1.62	1.75
Weight	kg	0.25	0.25
Dimensions (W x H x D)	mm	27.4 x 98 x 114.3	27.4 x 98 x 114.3
Order information	Art. no.	142695	142696

AUDIN - 8, avenue de la malle - 51370 Saint Brice Courcelles - Tel : 03.26.04.20.21 - Fax : 03.26.04.28.20 - Web : http: www.audin.fr - Email : info@audin.fr

Motion CPU Specifications (Motion SFC)

Item			Q172CPUN	Q173CPUN
Program capacity	Programm code total (Motion SFC flow chart+Operation control+transition)		287 kByte	
	Text total (operation control+transition)		224 kByte	
Motion SFC program	Number of Motion SFC programs		256 (no. 0 to 255)	
	Motion SFC chart size/program		Max. 64 kByte per program (included Motion SFC chart comments)	
	Number of Motion SFC steps/program		Max. 4094 steps	
	Number of selective branches/branch		Max. 255	
	Number of parallel branches/branch		Max. 255	
	Parallel branch nesting		Up to 4 levels	
Operation control program (F/FS) Transition program (G)	Number of operation control programs		4096 in combination with F (once execution type) and FS (scan execution type) combined (F/FS0 to F/FS4095)	
	Number of transition programs		4096 (G0 to G4095)	
	Code size/program		Max. approx. 64k bytes (32766 steps)	
	Number of blocks(line)/program		Max. 8192 blocks (in the case of 4 steps(min)/blocks)	
	Number of characters/block		Max. 128 (comment included)	
	Number of devices/block (line)		Max. 64 (devices: constants, word devices, bit devices)	
	Nesting per block		Max. 32	
	Descriptive expression	Control program	Calculation expression/bit conditional expression	
		Transition program	Calculation expression/bit conditional expression/comparison conditional expression	
Program execution	Number of multi executed programs		Max. 256	
	Number of multi active programs		Max. 256 steps/all programs	
	Executed tasks	Normal task	Executed in motion main cycle	
		Interrupt task	Fixed cycles (0.88 ms, 1.7 ms, 3.5 ms, 7.1 ms, 14.2 ms) 16 external interrupt points (QI60 interrupt module inputs) Executed with interrupt from Q PLC CPU (when PLC CPU dedicated command S(P).GINT is executed)	
		NMI task	16 external interrupt points (QI60 interrupt module inputs)	
Processing time	SV13		0.88 ms (1. to 8. axis)	0.88 ms (1. to 8. axis) 1.77 ms (9. to 16. axis) 3.55 ms (17. to 32. axis)
	SV22		0.88 ms (1. to 4. axis) 1.77 ms (5. to 8. axis)	0.88 ms (1. to 4. axis) 1.77 ms (5. to 12. axis) 3.55 ms (13. to 24. axis) 7.11 ms (25. to 32. axis)
Number of devices	Number of I/O points (X/Y)		8192 points	
	Number of real I/O points (PX/PY)		Total 256 points (these inputs/outputs can be assigned directly to the Motion CPU.)	
	Internal relays (M)		8192 points (in total)	
	Latch relays (L)			
	Link relays (B)		8192 points	
	Annunciators (F)		2048 points	
	Special relays (M)		256 points	
	Data registers (D)		8192 points	
	Link registers (W)		8192 points	
	Special registers (D)		256 points	
	Number of motion register (#0)		8192 points	
	Number of coasting timers (FT)		1 point (888 µs)	

AUDIN - 8, avenue de la malle - 51370 Saint Brice Courcelles - Tel : 03.26.04.20.21 - Fax : 03.26.04.28.20 - Web : http: www.audin.fr - Email : info@audin.fr

Servo External Signals Interface Module Q172LX

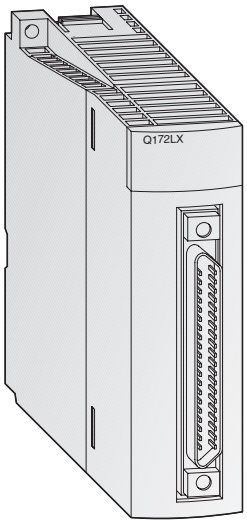

Capture of external servo signals

The Q172LX input module is used in conjunction with a Q Motion CPU to capture external servo signals.

Up to 8 axes can be evaluated per module. In this way, cam-switching values, limit switching positions, stop positions and operating modes can be easily incorporated into the system.

Special features:

- 32 address points for 8 axes for each 4 inputs
- Bipolar inputs for positive and negative logic
- Galvanic isolation of the inputs by means of photocoupler
- Shortest response time of < 0.4 ms
- Modular extension possible

Item		Q172LX
External servo signals	Number of inputs	Servo external signals: 32 points (for 8 axes per 4 inputs for: - proximity switch (upper stroke limit) - proximity switch (lower stroke limit) - stop input - proximity dog/speed-position switching signal)
	Input method	Sink/source type
	Isolation method	Photocoupler
	Rated input voltage	12/24 V DC
	Operating voltage range	10.2 to 26.4 V DC (12/24 V DC +10/ -15%, ripple ratio 5% or less)
	Rated input current	2 mA at 12 V DC, 4 mA at 24 V DC
	ON voltage/current	Min. 10 V / min. 2.0 mA
	OFF voltage/current	Max. 1.8 V / max. 0.18 mA
	Input resistance	About 5.6 kΩ
	Response time of the upper/lower stroke limit and the STOP signal.	OFF → ON and ON → OFF: 1 ms
	Response time of the proximity dog, speed-position switching signal.	OFF → ON and ON → OFF: CPU parameter setting (0.4 ms, 0.6 ms, 1 ms), default value: 0.4 ms
	Inputs per group	32
	Status indication	One LED per input
External connector type		40 pin connector
Applicable wire size		0.3 mm^2
Applicable connector for the external connection		A6CON-1 (supplied with the module), A6CON-2 and A6CON-3 (optional)
Applicable connector/ terminal block converter module		A6TBXY36, A6TBXY54, A6TBXY70
Number of I/O points		32
Internal current consumption (5 V DC)		50 mA
Weight		0.15 kg

Order number	140583

AUDIN - 8, avenue de la malle - 51370 Saint Brice Courcelles - Tel : 03.26.04.20.21 - Fax : 03.26.04.28.20 - Web : http: www.audin.fr - Email : info@audin.fr

Serial Absolute Synchronous Encoder Interface Module Q172EX

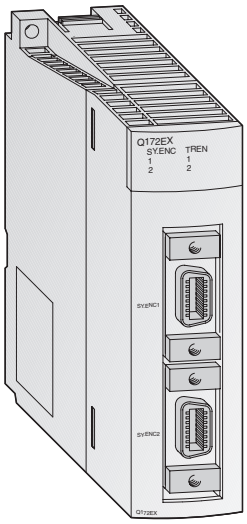

Capture and evaluation of encoder signals

The serial absolute synchronous encoder interface module Q172EX is a Motion system module for receiving and evaluating up to two serial absolute-value encoders. (Incremental encoders cannot be connected.) Via an external encoder (MR-HENC) it is possible to feed a setpoint source to the Motion system, which in turn is programmed as a guide axis.

In addition to the interfaces for the signals of two absolute-value encoders, the Q172EX has two digital inputs with ultra-rapid response times.

Special features:

- Transfer rate of 2.5 MBit per second
- Resolution of 14 Bit
- Voltage-failure security of the absolute values by means of built-in buffer battery
- Shortest response times of < 0.4 ms
- Modular extension possible

Item			Q172EX
Digital inputs (tracking enable)	Number of inputs		2
	Input method		Sink/Source type
	Isolation method		Photocoupler
	Rated input voltage		12/24 V DC
	Operating voltage range		10.2 to 26.4 V DC (12/24 V DC +10/ -15%, ripple ratio 5% or less)
	Rated input current		2 mA at 12 V DC, 4 mA at 24 V DC
	ON voltage/current		Min. 10 V / min. 2.0 mA
	OFF voltage/current		Max. 1.8 V / max. 0.18 mA
	Input resistance		About 5.6 kΩ
	Response time	OFF → ON	CPU parameter setting (0.4 ms, 0.6 ms, 1 ms), default value: 0.4 ms
		ON → OFF	
	Status indication		One LED per input
	Terminal arrangement		2 points (TREN and TREN.CO) in each of both SY.ENC connectors (20 pin connectors)
Serial absolute synchronous encoder input	Number of encoder		2/module
	Applicable encoder		Serial absolute synchronous encoder (MR-HENC)
	Resolution		16384 pulses/revolution (14 Bit)
	Transmission method		Serial
	Communication speed		2.5 MBaud
	Synchronous method		Counter-clock-wise (viewed from end of shaft)
	External connector type		Via two 20 pin connectors
	Recommended encoder cables		MR-JHSCBL□M-L (standard cable), MR-JHSCBL□M-H (high flexible cable); available length (= □): 2, 5, 10, 20 and 30 m
	Cable length		Max. 30 m
	Back up the absolute position		By integrated battery A6BAT
	Battery service life time		15000 hours (with 2 connected encoders), 30000 hours (with one connected encoder) Ambient temperature 40 °C.
Internal current consumption (5 V DC)			70 mA
Weight			0.15 kg

Order number	140584

AUDIN - 8, avenue de la malle - 51370 Saint Brice Courcelles - Tel : 03.26.04.20.21 - Fax : 03.26.04.28.20 - Web : http: www.audin.fr - Email : info@audin.fr

Manual pulse generator interface module Q173PX

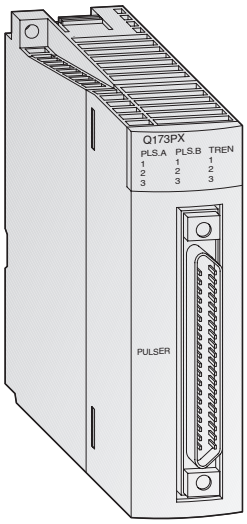

Capture of external signals

The Manual pulse generator interface module Q173PX is used in a Motion system to receive the signals of up to 3 external incremental encoders or manual impulse generators (hand wheels).

In addition to the inputs for the encoders, the Q173PX has three digital inputs with which the encoder signal counting procedure can be started (Encoder start signal).

Special features:

- Bipolar inputs for positive and negative logic
- Galvanic isolation of the inputs by means of photocoupler
- Shortest response times of < 0.4 ms
- Modular extension possible

Item			Q173PX
Encoder start signals	Number of inputs		3
	Input method		Sink/Source type
	Isolation method		Photocoupler
	Rated input voltage		12/24 V DC
	Operating voltage range		10.2 at 26.4 V DC (12/24 V DC +10/ -15%, ripple ratio 5% or less)
	Rated input current		2 mA at 12 V DC, 4 mA bei 24 V DC
	ON voltage/current		Min. 10 V / min. 1.0 mA
	OFF voltage/current		Max. 1.8 V / max. 0.18 mA
	Input resistance		ca. 5.6 kΩ
	Response time	OFF → ON ON → OFF	CPU parameter setting (0.4 ms, 0.6 ms, 1 ms), default value: 0.4 ms
	Inputs per group		1
	Status indication		One LED per input
Manual pulse generator or synchronous encoder input	Number of encoders		3
	Applicable types		Voltage-output type / open-collector type (5 V DC, recommended device: MR-HDP01) or differential output type (26L31 or equal)
	Input voltage (high-level)		3.0 to 5.25 V DC
	Input voltage (low-level)		0 to 1 V DC
	Input frequency		Max. 400.000 pulses/s (after magnification by 4)
External connector type			40 pin connectors
Applicable wire size			0.3 mm^2
Applicable connector for the external connection			A6CON-1 (supplied with the module), A6CON-2 and A6CON-3 (optional)
Applicable connector / terminal block converter module			A6TBXY36, A6TBXY54, A6TBXY70 (optional)
Max. cable length	Voltage output/ open collector type		10 m
	Differential output type		30 m
Number of I/O points			32
Internal current consumption (5 V DC)			110 mA (when one manual pulse generator and one encoder is connected)
Weight			0.150 kg

Order number	140585

AUDIN - 8, avenue de la malle - 51370 Saint Brice Courcelles - Tel : 03.26.04.20.21 - Fax : 03.26.04.28.20 - Web : http: www.audin.fr - Email : info@audin.fr

■ Servo Amplifiers and Motors

MELSERVO MR-J2S□B

The recommended combinations of servo amplifiers and servo motors are listed in the tables below.

For further details to the servo amplifiers please refer to the MELSERVO Technical Catalogue. There you can find detailed specifications to all servo motors as well as order informations to motor and encoder cables.

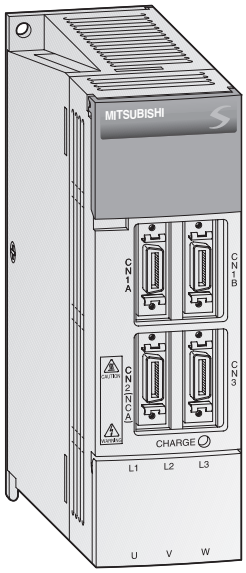

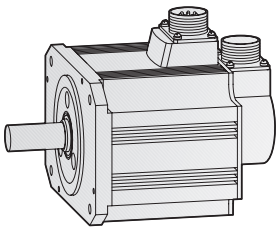

Motor Series	Rated Speed [r/min]	Rated Output Capacity [kW]	Servo Motor Model	Servo Motor Type: With Electromagnetic Brake (B) and Absolute Encoder	Protective Structure	Amplifier Pairing MR-J2S: 10B	20B	40B	60B	70B	100B	200B	350B	500B	700B
HC-KFS K	3000	0.05	HC-KFS053	●	IP55	●									
		0.1	HC-KFS13			●									
		0.2	HC-KFS23				●								
		0.4	HC-KFS43					●							
		0.75	HC-KFS73							●					
HC-MFS M	3000	0.05	HC-MFS053	●	IP55	●									
		0.1	HC-MFS13			●									
		0.2	HC-MFS23				●								
		0.4	HC-MFS43					●							
		0.75	HC-MFS73							●					
HC-SFS S	2000	0.5	HC-SFS52	●	IP65				●						
		1.0	HC-SFS102								●				
		1.5	HC-SFS152									●			
		2.0	HC-SFS202									●			
		3.5	HC-SFS352										●		
		5.0	HC-SFS502											●	
		7.0	HC-SFS702												●
HC-RFS R	3000	1.0	HC-RFS103	●	IP65							●			
		1.5	HC-RFS153									●			
		2.0	HC-RFS203										●		
		3.5	HC-RFS353											●	
		5.0	HC-RFS503											●	

For further details please refer to the MR-J2-Super Technical Catalogue.

AUDIN - 8, avenue de la malle - 51370 Saint Brice Courcelles - Tel : 03.26.04.20.21 - Fax : 03.26.04.28.20 - Web : http: www.audin.fr - Email : info@audin.fr

Components for Motion Controller Programming

The Motion controller CPUs can be programmed using commercially available PCs or notebooks. Programming is implemented either via the USB or RS232 interface of the CPU or via the SSCNET Motion network. You thereby achieve maximum system performance in conjunction with an optional SSCNET-ISA plug-in card for standard personal computers or via an SSCNET-PCMCIA plug-in card for notebooks. The user can choose between a multitude of options based on the choice of USB , RS232 or SSCNET interfaces for the Motion CPU and the PLC CPU.

On the following pages you can find an overview on all hardware and software peripheral equipment which is necessary for the programming.

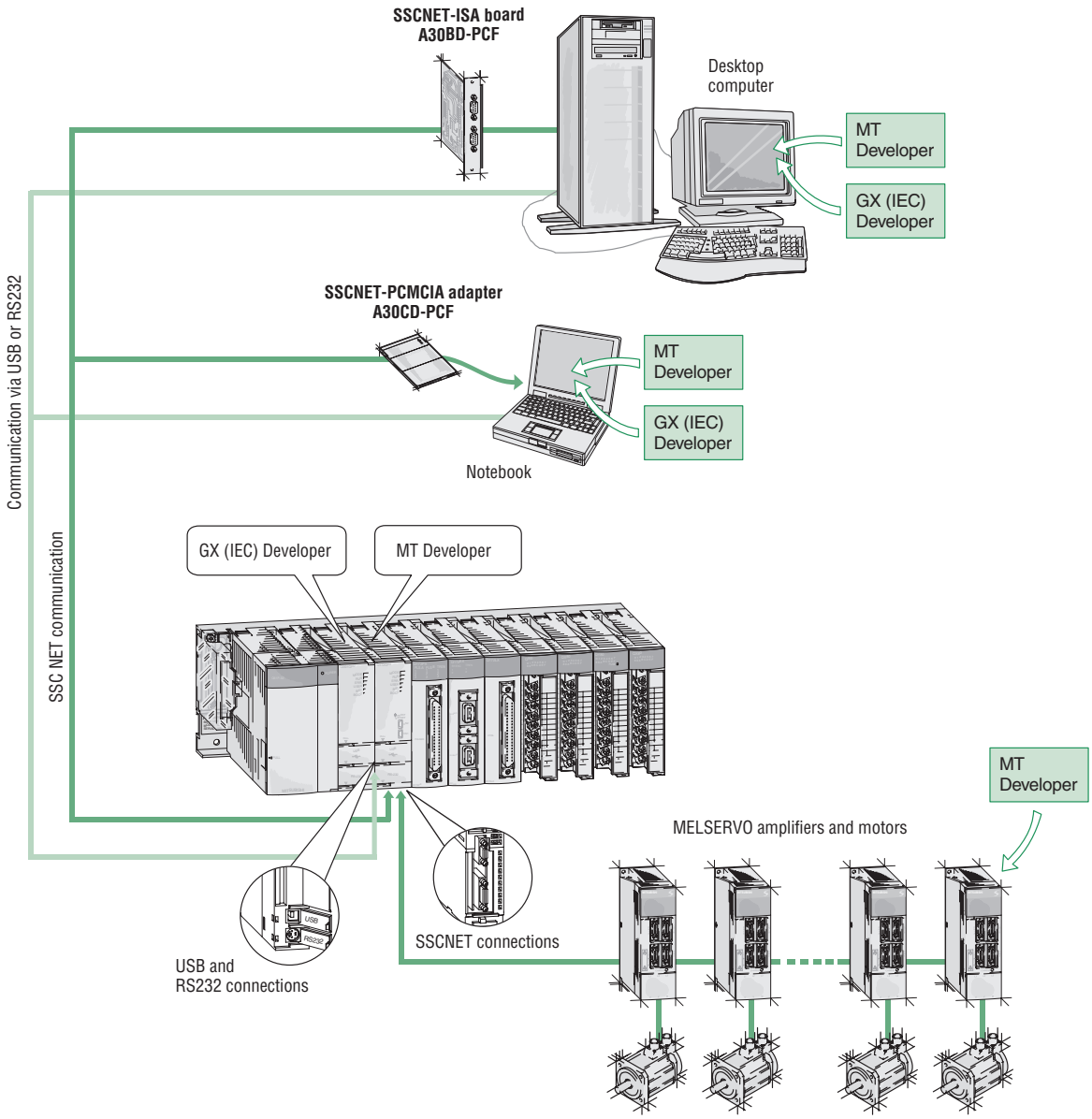

System Requirements

A personal computer with Microsoft Windows operationg system is necessary to operate the software.

Pay attention to the system specifications which are listed in the table.

Specifications	Description
Operating system	Windows 2000/NT 4.0, Windows 98
CPU	133 MHz Pentium or higher
Memory capacity	Min. 32 MB
Hard disk capacity	About 150 MB free space
Graphics adapter	Standard graphics adapter with 800 x 600 pixles and minimum 256 colours
Additional application software	Microsoft Word 97 and Excel 97 (for document printing)

AUDIN - 8, avenue de la malle - 51370 Saint Brice Courcelles - Tel : 03.26.04.20.21 - Fax : 03.26.04.28.20 - Web : http: www.audin.fr - Email : info@audin.fr

Operating System Software Packages

The beside table lists an overview of the required operating system for the motion CPUs.

The systems are chosen on the basis of the operating mode (SV13/SV22) and the number of axes to be controlled.

Application	Peripheral device	Description Q172CPUN	Order no.	Description Q173CPUN	Order no.
Software **SV13** (Motion-SFC)	Personal computer or notebook	SW6RN-SV13QD	144695	SW6RN-SV13QB	144695
Software **SV22** (Motion-SFC)		SW6RN-SV22QC		SW6RN-SV22QA	

All operating systems are delivered on one CD-ROM.

Programming Software Package

The MT Developer programming software package contains a range of high-performance programming modules for the convenient programming, monitoring, maintenance and documentation of your Motion Control System of the MELSEC System Q.

The software can run using Windows 98/XP and Windows NT4/2000.

MT Developer Software Package Contents	Item	Function	Description
Environment for sequence control program	SW6RN-GSV13P	Conveyor assembly	Motion system setting, programming, monitoring and test
	SW6RN-GSV22P	Virtual mechanical system environment	Motion system setting, programming, monitoring and test
	SW3RN-CAMP	Cam data creation	Motion creation with Cam pattern selection and free curve setting
	SW3RN-DOCPRNP	Document printing for MS-Office 97	Program and parameter data conversion as well as digital oszilloscop output to Microsoft Word/Excel for documentation and printout.
	SW20RN-DOCPRNP	Document printing for MS-Office 2000	
Maintenance environment	SW6RN-DOSCP	Digital oscilloscope	System monitoring and maintenance
Environment for user data development	SW6RN-SNETP	Communications setup	Manager for SSCNET network
Order number	144543		

Application Ranges of the Programming Software Packages

SW6RN-GSV13P Motion SV13

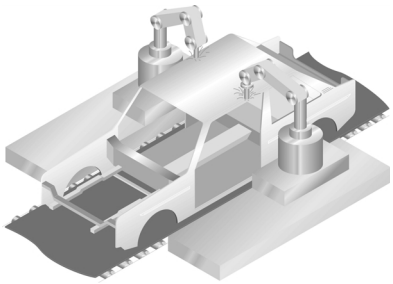

Software: conveyor assembly

With this software constant-speed control, speed control, 1 to 4-axes linear interpolation and 2-axes circular interpolation, etc are possible. Ideal for use in standard conveyors and assembly machines.

Application examples:

- Electronic component assembly
- Inserter und feeder
- Conveying equipment
- Paint applicator
- Chip mounter
- CNC and welding machines
- X-Y table

Special features:

- Linear interpolation (1 to 4-axes)
- Circular interpolation (1 to 2-axes)
- Constant-speed control and fixed-pitch feed
- Speed change control
- Speed-positionswitching
- Teaching function

SW6RN-GSV22P Motion SV22

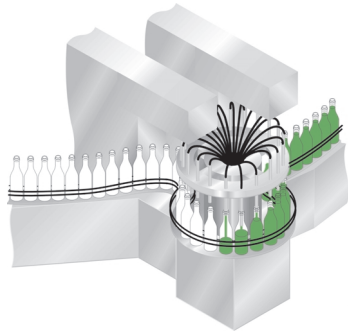

Software with virtual mechanical system environment and cam control

This software package provides simultaneous control of multiple servo motors and offers software cam control. Ideal for use in automatic machinery. The software provides the option to replace formerly used mechanical vertical shafts, clutches, and gearings by electronic systems. Moreover, virtual and real master axes can be realized.

Application examples:

- Press feeder
- Food processing
- Packing facilities
- Winding machine
- Textile and spinning machines
- Printing machines and book binder
- Tire molder
- Paper-making machine

Special features:

- Synchronous control
- Electronic shaft
- Electronic clutch
- Electronic cam
- Draw Co

AUDIN - 8, avenue de la malle - 51370 Saint Brice Courcelles - Tel : 03.26.04.20.21 - Fax : 03.26.04.28.20 - Web : http: www.audin.fr - Email : info@audin.fr

Application Ranges for Motion SV13 Software Environment

Simple programming using dedicated commands

By using easily understood dedicated servo command and sequence commands positioning and locus control can be programmed for your needs.

Control which is considered difficult and complex can be carried out simply using a variety of canned motion control functions.

X-Y table control

- 2-axes linear interpolation
- 3-axes linear interpolation
- 2-axes circular interpolation
- Constant speed locus control

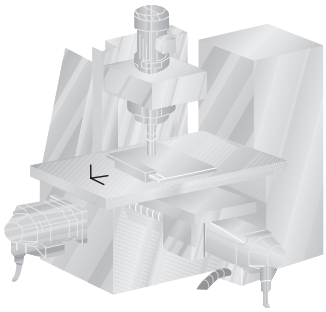

Sealing

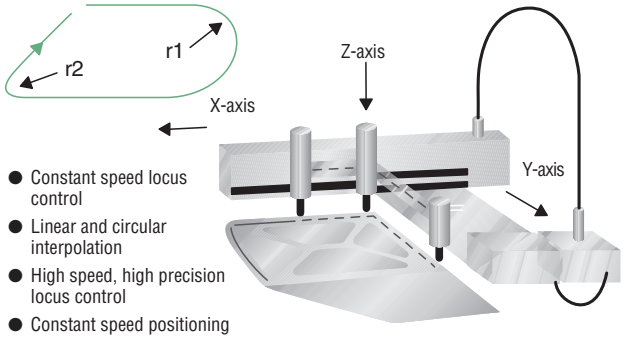

- Constant speed locus control
- Linear and circular interpolation
- High speed, high precision locus control
- Constant speed positioning

Feed control

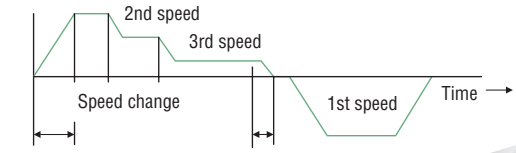

- Speed-switching control
- No limit of speed switching points

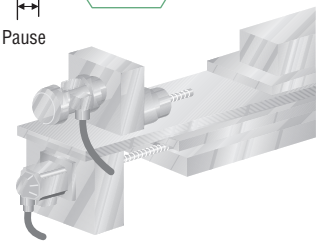

Fixed-pitch hole drilling

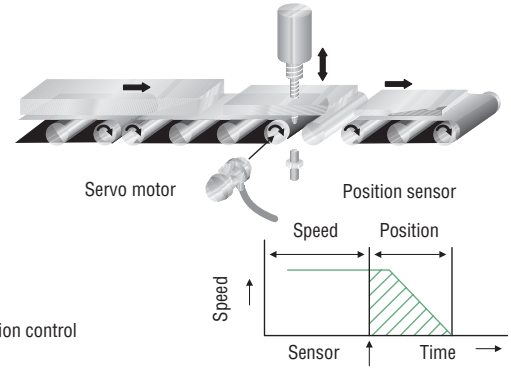

- Speed-position control

Rotary table indexing

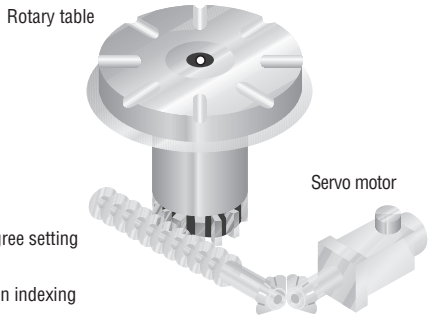

- Control unit: degree setting
- Shorter indexing
- Rotation direction indexing

Roll feeder

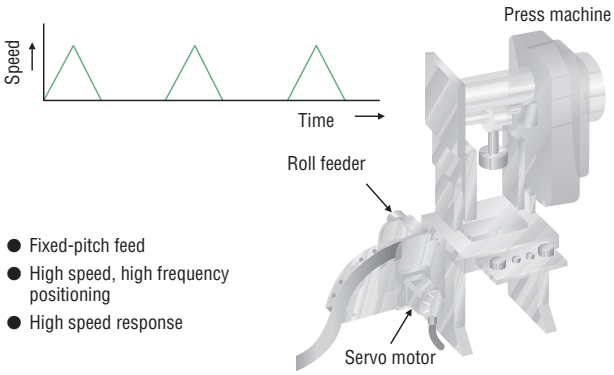

- Fixed-pitch feed
- High speed, high frequency positioning
- High speed response

AUDIN - 8, avenue de la malle - 51370 Saint Brice Courcelles - Tel : 03.26.04.20.21 - Fax : 03.26.04.28.20 - Web : http: www.audin.fr - Email : info@audin.fr

Application Ranges for Motion SV22 Software Environment

Easy on-screen programming using the mechanical support language.

Loaded with a mechanical support language that allows easy programming of the machine mechanism. Ideal for controlling automated machines such as food machines and wrappers.

By freely combining a variety of software mechanism modules and cam patterns, complex synchronization control and coordinated control can be achieved easily and low cost.

Filling machine

The extremely high-speed controllers and ultra-precision positioning performance of these Mitsubishi systems make them ideal for dynamic filling processes. The flexibility of the system – for the example the ability to choose from a variety of movement profiles and cam disks – enables quick format changes, which means you can fill different containers on a single machine.

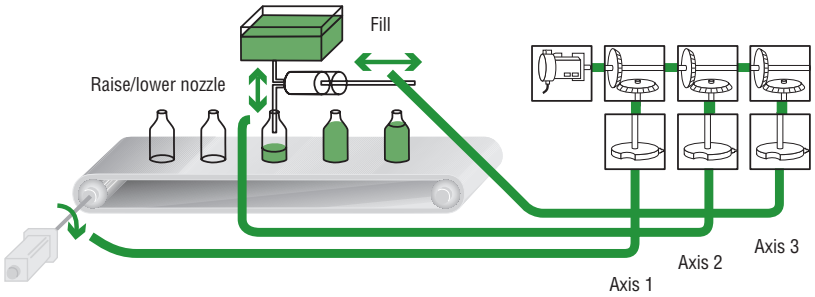

Rolling mill

The ability to synchronise the speeds of multiple motors is essential for maintaining the synchronised feed rates needed to keep the rolling mill output thickness precisely constant.

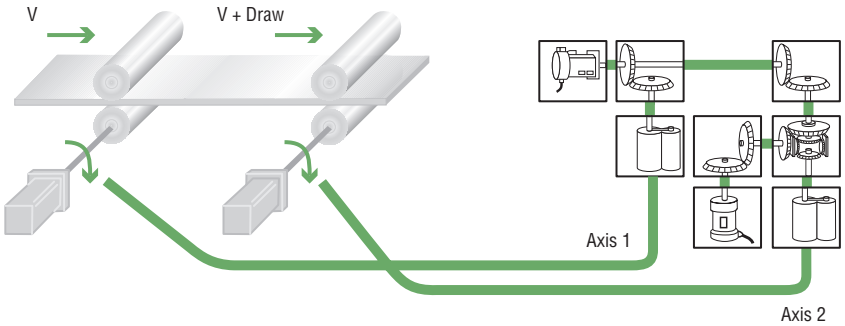

Press conveyor

Mitsubishi motion controllers are also the ideal solution in applications where a large number of different axes need to be synchronised for optimum performance. In addition to precisely synchronising multiple axes (see example on the right) they guarantee smooth, jerk-free and extremely high-precision positioning.

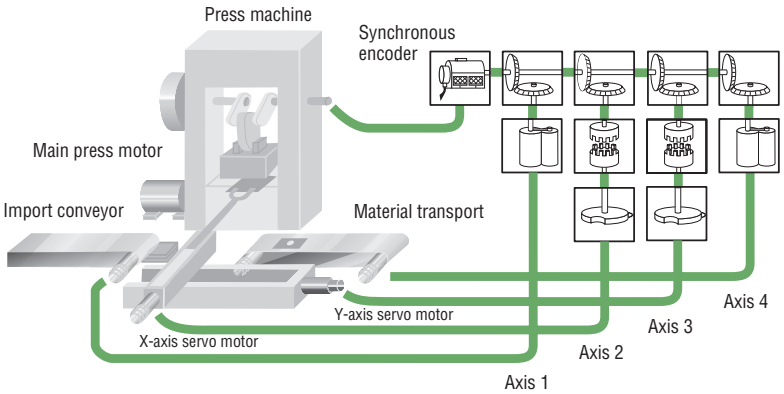

Palletising and sorting

At the press of a button the system sorts and stacks the chosen stacking plan, supporting a choice of different stacking and warehousing plans. Curve interpolation for single or multiple axes enables dynamic positioning performance.

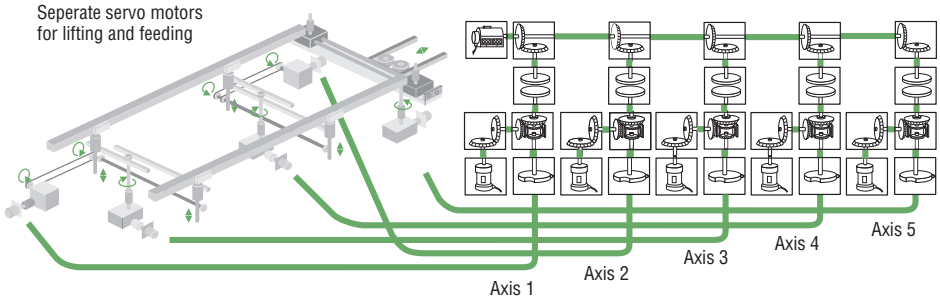

AUDIN - 8, avenue de la malle - 51370 Saint Brice Courcelles - Tel : 03.26.04.20.21 - Fax : 03.26.04.28.20 - Web : http: www.audin.fr - Email : info@audin.fr

Multi-processor technology with PLC CPU and Motion CPU

Minimized variation in control response time

With the conventional SV13/SV22, the series of machine operations were controlled by the SCPU so a variation occured in the response time per seguence scan. However, this can be minimized by the strengthened Motion SFC event processing function, so the scan time can be suppressed, and variations in product machining can be reduced.

Multi-CPU method that strengthens event processing function

The multi-point I/O control and monitoring operations can be appointed to the SCPU by the ladder program, and the servo control and high-speed response control can be appointed to the PCPU by the Motion SFC program. This balances the scan process and event process, and further utilizes the multi-CPU configuration.

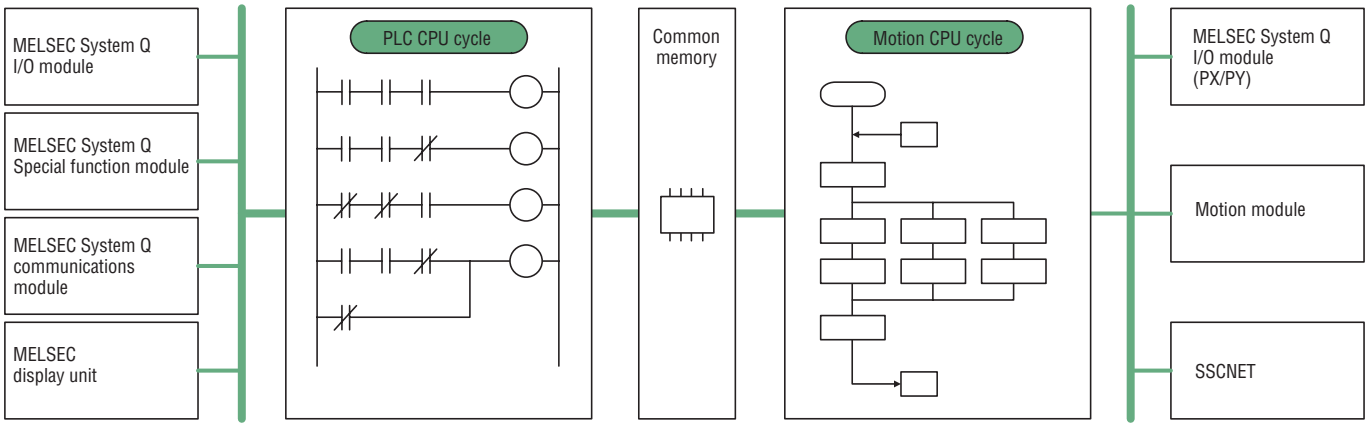

Ladder description suitable for scan process
(importance laid on condition control)

- Multi-point I/O control
- Various condition processing

Motion SFC description suitable for event proces
(Importance laid on sequential control, pursuit of event responsiveness)

- Servo control
- High-speed response control

Event processing

This process waits for the conditions to be established (event to occur) with the changes in the input signal state or device value, and carries out high-speed response control (signal output control, servo motor start and speed change, etc.) when the conditions are established.

Examples of events

- Input signal turned ON.
- Operation results reached constant value.
- Set time elapsed.
- Positioning was completed.

AUDIN - 8, avenue de la malle - 51370 Saint Brice Courcelles - Tel : 03.26.04.20.21 - Fax : 03.26.04.28.20 - Web : http: www.audin.fr - Email : info@audin.fr

Motion SFC Programming

Flow chart description which is easy-to-view and understand

As the outline operation of the process control is described as a flow chart, the entire operations can be viewed at a glance. The operation details can be described as a comment so an easy-to-understand program can be created. The program has a hierarchical structure, so detailed operations can be described for each step.

The operation expression can be described in the original state. Compatible with 64-bit floating point operation. Various arithmetic functions including trigonometric functions, square root and natural logarithm are provided. The motion registers (#0 to #8191) have been added for Motion SFC operations.

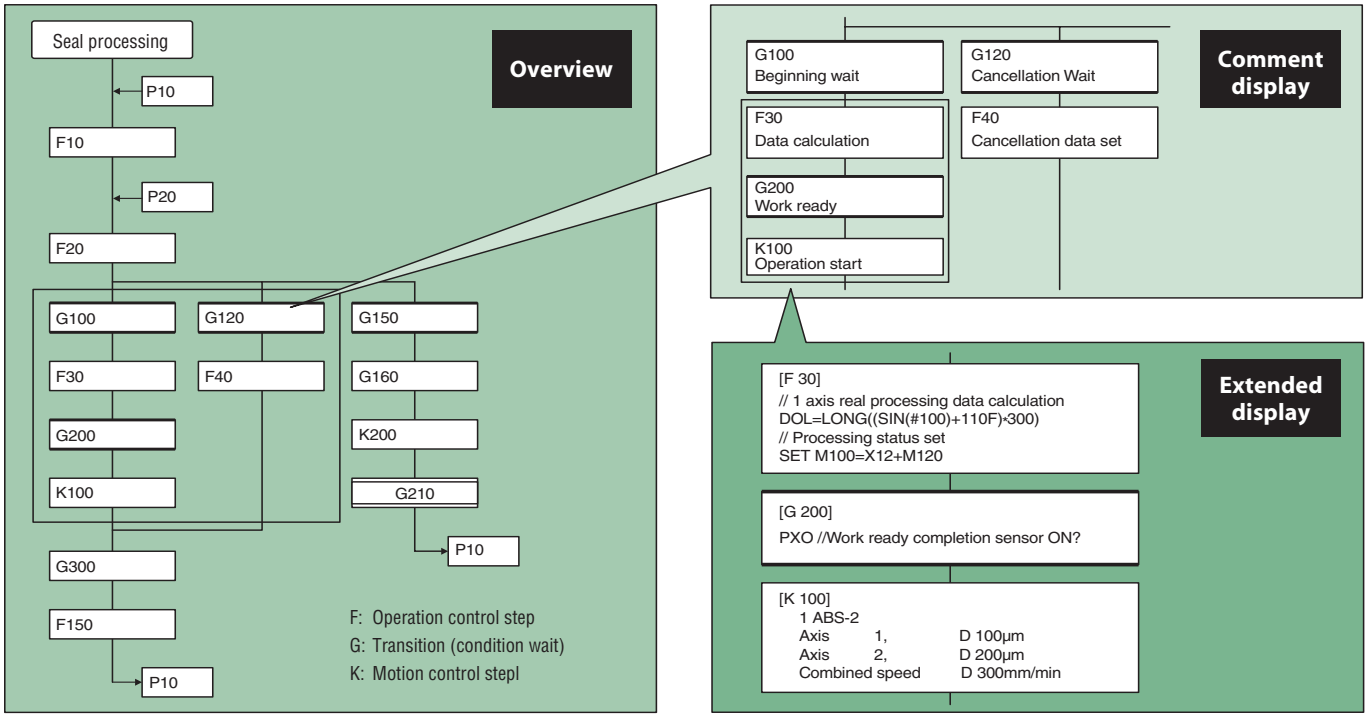

Program operation

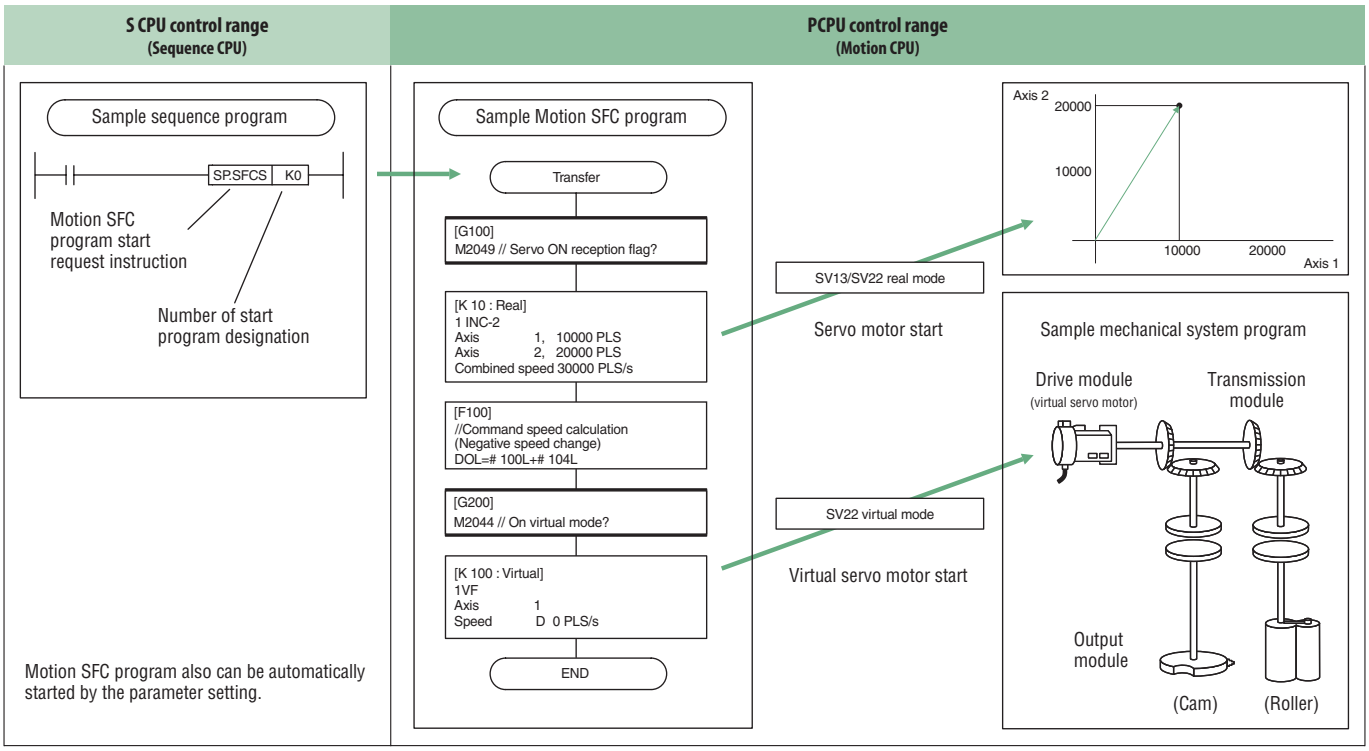

AUDIN - 8, avenue de la malle - 51370 Saint Brice Courcelles - Tel : 03.26.04.20.21 - Fax : 03.26.04.28.20 - Web : http: www.audin.fr - Email : info@audin.fr

Overview of the various program packages

■ PLC CPU programming with GX (IEC) Developer

With the software GX Developer you can comfortably create PLC programs alternatively in the form of Ladder Diagrams or Instruction Lists.

GX IEC Developer provides all functions of the GX Developer and in addition meets the programming standard for the future: IEC 1131.3 (EN 61131).

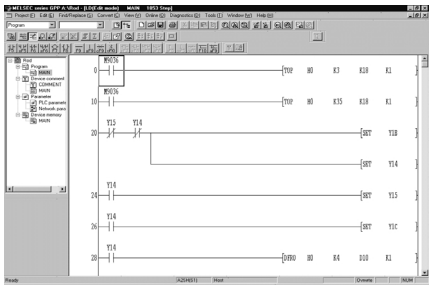

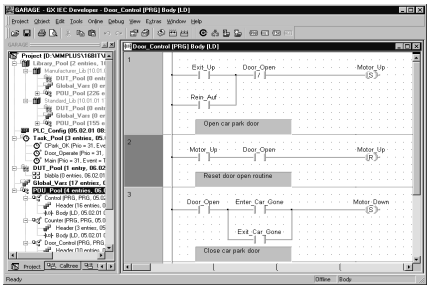

■ Motion CPU programming with MT Developer

System configuration and parameter adjustment

The Motion systems as well as the servo amplifiers and servo motors are configured conveniently according to selections in the menu. All specific parameters are operated.

Comprehensive explanations and help functions are available for the individual servo parameters.

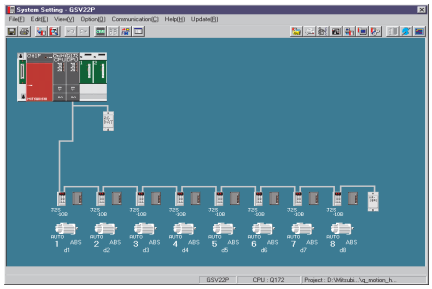

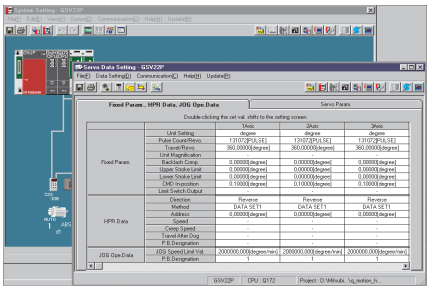

Motion-SFC

The instructions can be chosen from a selection window when inputting the programs, the individual steps and the further processing conditions.

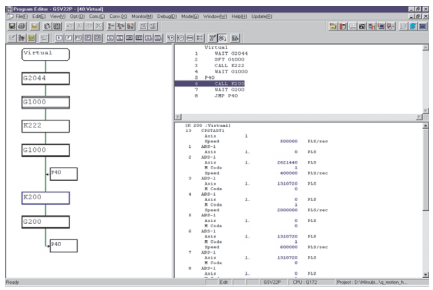

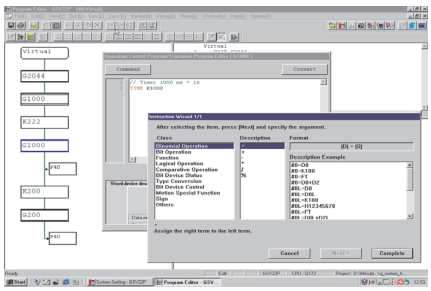

High-speed response using step execution method

The sequence program uses a scan execution method to execute all steps with constant scanning. However, with the Motion SFC, the step execution method executes only the active steps following the shift conditions. Thus, the operation process can be reduced, and processing and response control can be realized.

Multi-tasking

With the Motion SFC, when several programs are started, the process is carried out with multi-task operation. Multiple steps can be simultaneously executed with parallel branching even within one program.

A program that excutes multiple processes simultaneously, or a program that groups the control axis for independent movements can be created easily. A highly independent programming is possible according to the process details, so an easy-to-comprehend program can be created.

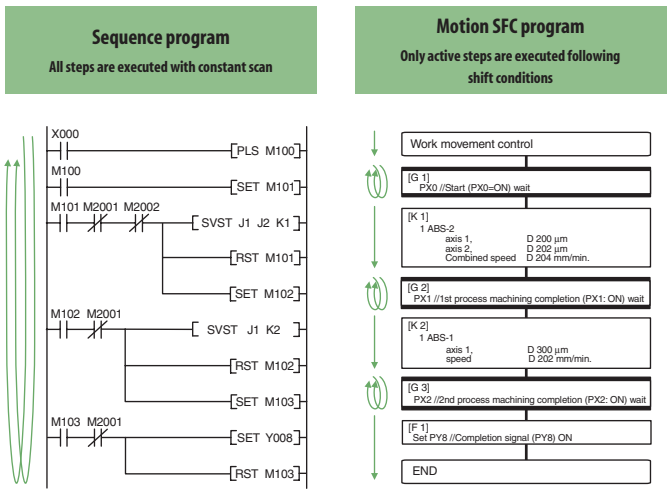

AUDIN - 8, avenue de la malle - 51370 Saint Brice Courcelles - Tel : 03.26.04.20.21 - Fax : 03.26.04.28.20 - Web : http: www.audin.fr - Email : info@audin.fr

Cam curve programming

The mechanical cam curves are configured by selecting the type and freely defining the characteristic curve. The current cam curve together with information about the maximum deflection, maximum speed, acceleration curves and impact are represented graphically.

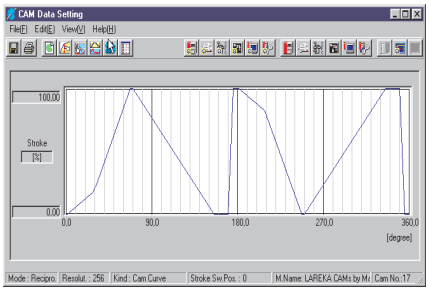

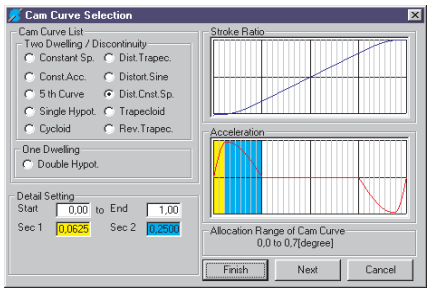

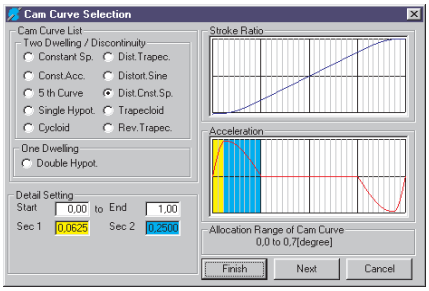

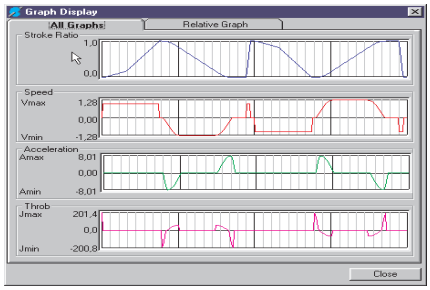

Virtual synchronisation (master shaft)

Mechanical components such as drive shafts, gearing, couplings etc, are replaced by electronic systems with the aid of a virtual editor.

This eliminates problems which arise with a conventional mechanical construction. The parameters of the mechanical components are programmed online. A multitude of mechanical components make this software a powerful but simple tool.

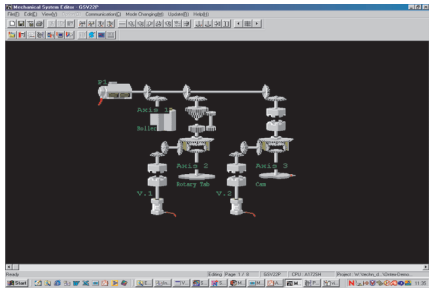

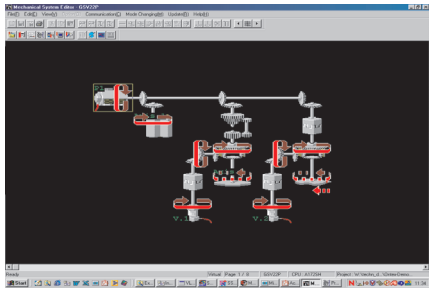

Mechanical module list

Mechanism section	Mechanical module: Name	Mechanical module: Appearance	Function
Drive module	Virtual servo motor		Used to drive the virtual axis in the mechanical system program by the servo program or JOG start.
	Synchronous encoder		Used to drive the virtual axis by input pulse from an external synchronous encoder.
Virtual axis	Virtual main shaft	—	This is a virtual "link shaft". The rotation of the drive module is transferred to the transmission module.
	Virtual auxiliary input axis	—	This is the auxiliary input axis for input to the transmission module "differential gear". It is automatically displayed when the differential gear and the gear are connected.
Output module	Roller		Used when the speed control occurs at the final output.
	Ball screw		Used when the liner positioning occurs at the final output.
	Rotary table		Used when the angle control occurs at the final output.
	Cam		Used when the control other than those shown above occurs based on the cam pattern setting data. There are two cam control modes: the two-way cam mode and the feed cam mode.

Mechanism section	Mechanical module: Name	Mechanical module: Appearance	Function
Transmission module	Gear		Transfers the drive module rotation to the output axis. The travel valve input from the drive module multiplied by the set gear ratio, and transferred to the output axis so that it moves in the set direction.
	Direct clutch		Engages/disengages the output module with the drive module rotation. When switching the clutch ONN/OFF, there is a direct clutch for direct tranfer and a smoothing clutch for acceleration/deceleration processing which occurs in accordance with the smoothing time constant setting. Depending on the application, ON/OFF mode, address mode or external input mode can be selected. As the smoothing method, the time constant setting mode or degree of slippage setting method can be selected.
	Smoothing clutch		
	Speed change gear		Used to change the speed of the output module. The speed from the input axis side multiplied by the set speed change ratio and transferred to the output axis.
	Differential gear		The rotation of the auxiliary input axis substracted from the rotation of the virtual main shaft and transferred to the output axis.
			The rotation of the auxiliary input axis substracted from the rotation of the virtual main shaft and transferred to the output axis. (for connection to the virtual main shaft)

AUDIN - 8, avenue de la malle - 51370 Saint Brice Courcelles - Tel : 03.26.04.20.21 - Fax : 03.26.04.28.20 - Web : http: www.audin.fr - Email : info@audin.fr

SSCNET Dividing Unit

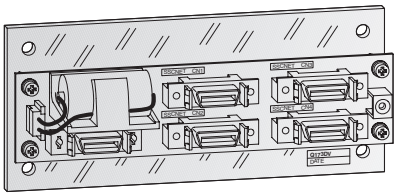

Dividing board Q173DV

The dividing board is used to multiply the number of interfaces of the Q173CPUN.

Up to four SSCNET-phases, each with 8 axes can be connected.

In addition, the dividing board has a holder for an optional MR-BAT buffer battery to save the data of the Motion program in the event of a power failure lasting more than 200 hours (8 days).

Specifications		Q173DV
Connectable SSCNET lines		4
Applicable battery		MR-BAT
Order information	Art. no.	140586

Connection Cable for SSCNET Dividing Unit

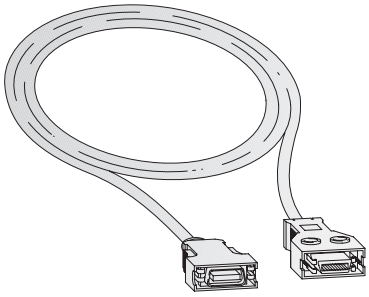

Connection cable Q173DVCBL

The cable connects the Q173CPUN to the SSCNET dividing board.

The cables area available in 2 different lengths.

Specifications		Q173DVCBL05M	Q173DVCBL1M
Type of cable		SSCNET cable	SSCNET cable
For connection		Q173CPUN and dividing unit Q173DV	Q173CPUN and dividing unit Q173DV
Available length	m	0.5	1.0
Order information	Art. no.	140587	140588

Battery Unit

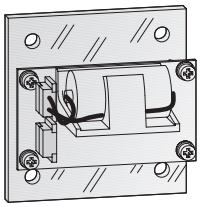

Battery unit Q170BAT

The purpose of this holder is to accommodate an optional buffer battery. The battery is required to save data if the power supply is interrupted for more than 200 hours (corresponding to 8 days).

Specifications		Q170BAT
Applicable battery		MR-BAT
Order information	Art. no.	142204

Connection Cable for Battery Unit and Servo Amplifier

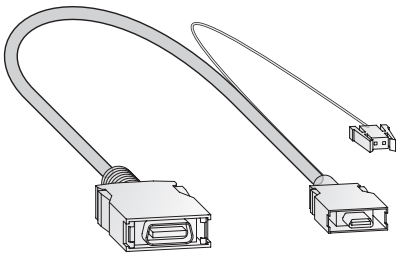

Connection cable Q172J2BCBL

The cables connect the Q170BAT battery holder and the servo booster to the Q172CPUN, and are available in 3 different lengths.

Specifications		Q172J2BCBL□M-B
Type of cable		SSCNET bus cable
For connection		Q172CPU and battery unit Q170BAT
Available lenght	m	0.5 / 1.0 / 5.0
Order information	Art. no.	142206/142207/142205

AUDIN - 8, avenue de la malle - 51370 Saint Brice Courcelles - Tel : 03.26.04.20.21 - Fax : 03.26.04.28.20 - Web : http: www.audin.fr - Email : info@audin.fr

SSCNET Connection Cables

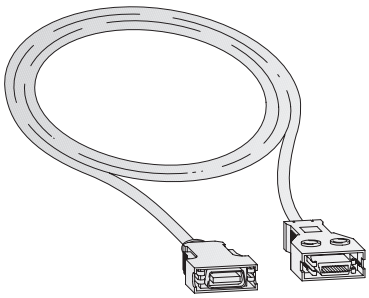

Connection Cables

The cable MR-J2HBUS□M connects two servo amplifiers.

For detailled informations please refer to the technical catalogue MR-J2-Super.

Specifications		MR-J2HBUS□M
Type of cable		SSCNET cable
For connection		MR-J2S-B/MR-J2-B with MR-J2S-B/MR-J2-B
Available lengths	m	0.5 / 1.0 / 5.0
Order information	Art. no.	70014 / 70012 / 70011

Termination Connectors

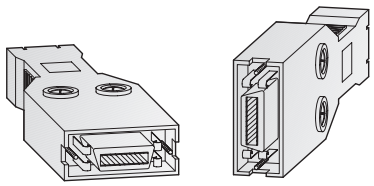

Connectors

By this bus end plug the SSCNET is terminated. The termination is required to ensure a faultless network operation. The plug is connected to the end of the bus on the last servo amplifier.

Specifications		MR-A-TM
Connector type		SSCNET connector for the last servo amplifier (MR-J2S-B/MR-J2-B)
Order information	Art. no.	70004

Manual Pulse Generator

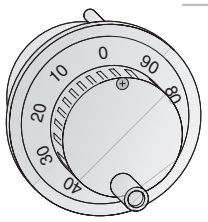

MR-HDP01

By this serial handwheel an external incremental setting value can be generated.

Specifications		MR-HDP01
Resolution		25 pls/rev (100 pls/rev at magnification of 4)
Output voltage		Input voltage > 1 V
Consumtion current		Max. 60 mA
Weight	kg	0.4
Order information	Art. no.	128728

Serial absolute synchronous encoder

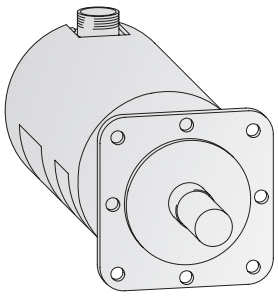

MR-HENC

This serial absolute synchronous encoder facilitates the integration of an external system (e. g. frequency inverter) in a motion system. The inverter is operated as real master axis, e. g. synchronized in a group.

Specifications		MR-HENC
Resolution		16384 pls/rev.
Direction on increase		Counter clockwise
Protection		IP52
Permissible rotation speed		4300 r/min
Perm. angular acceleration		4000 rad/s
Weight	kg	1.5
Order information	Art. no.	138304

AUDIN - 8, avenue de la malle - 51370 Saint Brice Courcelles - Tel : 03.26.04.20.21 - Fax : 03.26.04.28.20 - Web : http: www.audin.fr - Email : info@audin.fr

Motion Controller CPUs

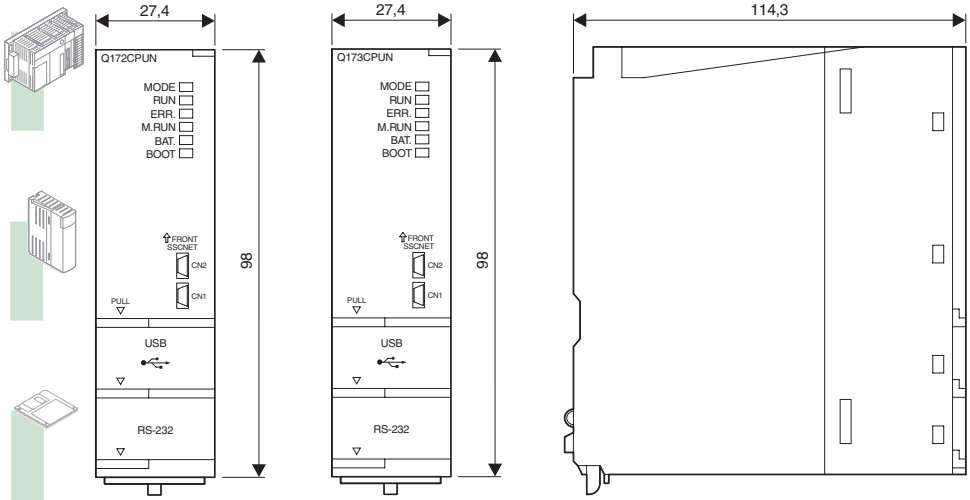

Motion Controller System Modules

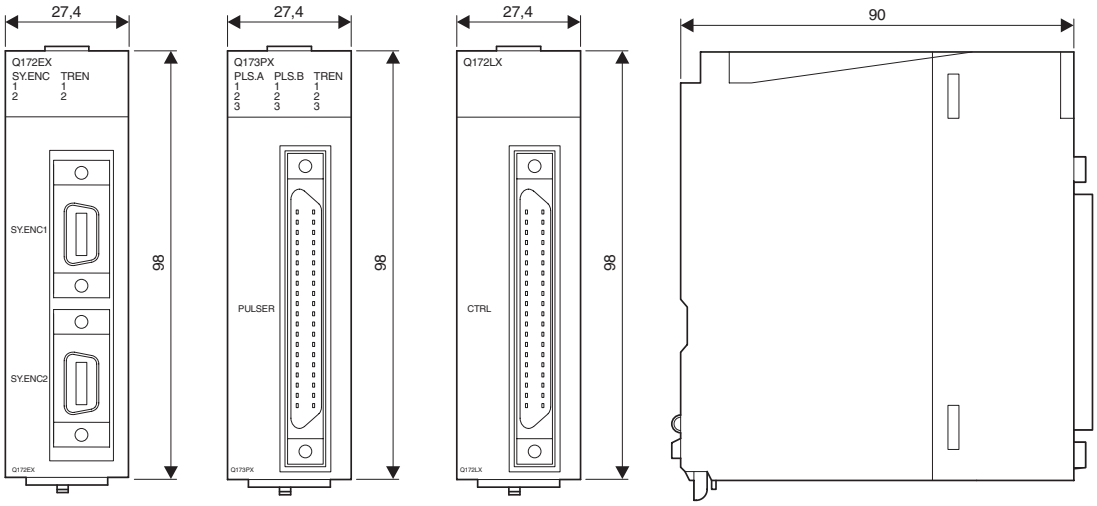

Serial Synchronous Absolute Encoder MR-HENC

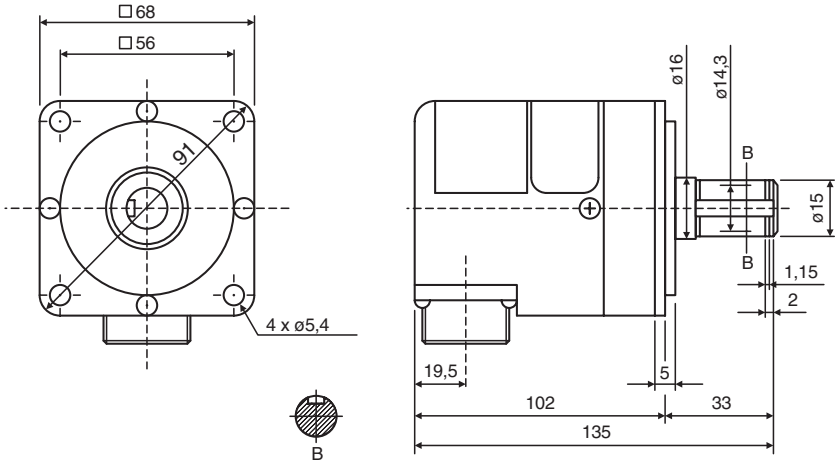

Manual Pulse Generator MR-HDP01

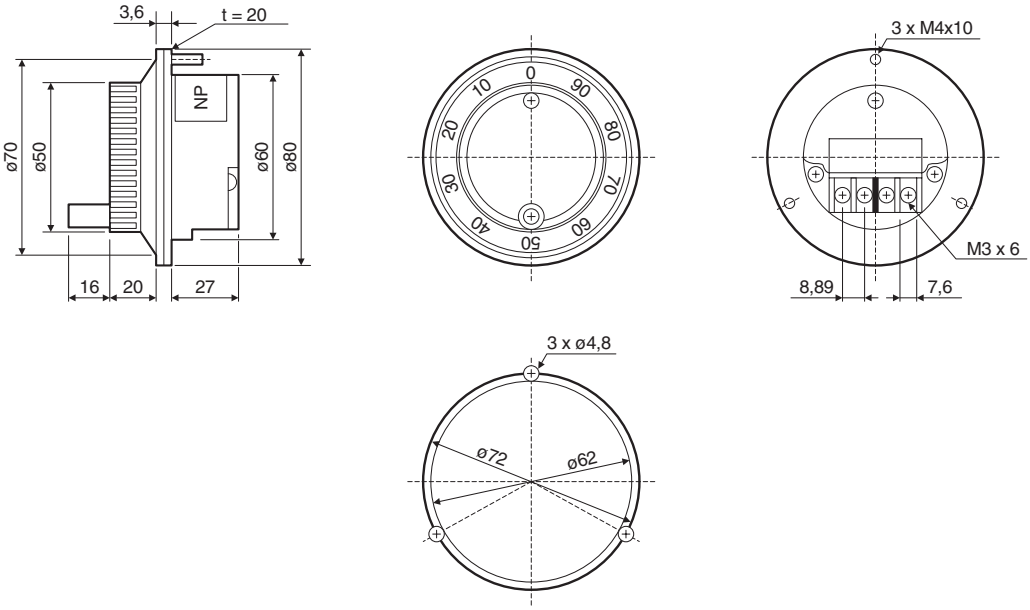

Design

The following tables are intended to guide you when you are designing a motion system and to help you with the selection of the required components.

More support will be given by the sales representative of MITSUBHISI ELECTRIC (see back cover).

■ Motion System

Component	Selection criterion
Type and number of motion CPU modules	Number of axes 1 to 8 axes: Q172CPUN (controls up to 8 axes per module) 9 to 96 axes: Q173CPUN (controls up to 32 axes per module)
Operating system of the motion CPU (SV13 or SV22)	Type and specification of the plant you want to control Conveyor assembly: SV13 Virtual Mechanical Editor with cam settings: SV22
Servo external signals interface modules Q172LX Extent of the wiring for the external signals	Number of external servo signals When there is a mechanical home position and dog type home position return is made or when switching from speed control to position control is required, the input DOG/CHANGE must be wired. For the detection of upper and lower limits, the inputs „FLS" and „RLS" are neccesarry. For stopping under speed or position control the input „STOP" is needed.
Encoder interface modules Q172EX	Number of serial absolute synchronous encoders used
Number of serial absolute synchronous encoders MR-HENC	
Serial absolute synchronous encoder cable MR-JHSCBL□M-L/H	Distance between serial absolute synchronous encoder and interface module; Requirements for the cable (standard or long life)
Number of Q173PX	Number of manual pulse generators or incremental synchronous encoders used
Manual pulse generator MR-HDP01	Number of manual pulse generators required
Interrupt module QI60	External interrupts are used for program control. An interrupt module is needed if external interrupts are specified in your application.
I/O modules	Requirements of the external equipment to be controlled.
Multiprocessor PLC CPU	Extent of the sequence program
Main base unit	Number of modules used (PLC CPU, Motion CPU, Q172LX, Q172EX, Q173PX, I/O modules, intelligent function modules)
Extension base unit Extension cables	
Power supply module	Power consumption of all installed CPUs and modules (pay attention to the current consumption of the Q PC; note total needed power) Available input voltage for the power supply module
Servo amplifier and servo motors	Required power from the servo motor and number of revolutions. For details see the manuals of the servo amplifiers.
SSCNET Dividing unit Q173DV	One dividing unit Q173DV, one cable and one battery MR-BAT is needed for each Q173CPUN installed. Choose the length of the cable (0.5 or 1 m) to your needs.
SSCNET cable Q173DVCBL□M	
Battery unit Q170BAT	For each Q172CPUN in use one battery unit, one cable and one battery MR-BAT is needed. The length of the cable depends on the distance between Q172CPUN and the first servo amplifier.
SSCNET cable Q172J2BCBL□M-B	
SSCNET cable MR-J2HBUS□M and termination connector MR-A-TM	Number of servo amplifiers and position of the servo amplifiers in the plant. Set the axis numbers to the servo amplifiers.

■ External Wiring

Item	Selection criterion
Power supply for multi CPU system, servo amplifier, external sensors and actors (e.g. solenoid valves)	Required power Safety regulations Countermeasures against interferences from electromagnetic noise
Safety circuits	Design a circuit which stops the motion system if an error occurs with the motion controller or the servo amplifier or when the emergency stop is applied. Design a circuit which avoids a malfunction while power is instable at power-on. Design the electromagnetic brake circuit for servo motors.

AUDIN - 8, avenue de la malle - 51370 Saint Brice Courcelles - Tel : 03.26.04.20.21 - Fax : 03.26.04.28.20 - Web : http: www.audin.fr - Email : info@audin.fr

Item	Design confirmation		Check
PLC CPU	Extent of the sequence program	ksteps	
	Selected PLC CPU		☐
Main base unit	Number of CPU modules	modules	
	Number of other modules installed to the main base	modules	
	Selected main base unit		☐
Extension base unit	Number of modules installed to the extension base unit	modules	
	Selected extension base unit		☐
Extension cable	Distance between main and extension base unit	m	
	Selected extension cable		☐
Power supply module for main base unit	Input voltage: ☐ AC ☐ DC	V	
	Current consumption of the modules installed at the main base unit	A	
	Selected power supply module		☐
Power supply module for extension base unit	Input voltage: ☐ AC ☐ DC	V	
	Current consumption of the modules installed at the extension base unit	A	
	Selected power supply module		☐
Programming cable	Interface in use (USB or RS232)		
	Selected programming cable		☐
Motion CPU	Number of axes	axes	
	Selected motion CPU (type and number)		☐
Q173PX	Number of manual pulse generators	pieces	
	Number of tracking enable signal inputs	inputs	
	Required number of manual pulse generator interface modules Q173PX (3 manual pulse generators per module)		☐
Q172LX	Number of upper stroke limit inputs (FLS)	axes	
	Number of lower stroke limit inputs (RLS)	axes	
	Number of stop signals (STOP)	axes	
	Number of proximity dog signals (DOG)	axes	
	Number of speed-position switching signals (CHANGE)	axes	
	Required number of servo external signals interface modules Q172LX		☐
Q172EX	Number of serial absolute synchronous encoders		
	Required number of serial absolute synchronous encoder interface modules Q172EX (2 encoders per module)		☐
Dividing unit Q173DV	Number of Q173CPUN = Required number of Q173DV	pieces	☐
Cable Q173DVCBL☐M	Number of Q173DV = Required number of connetion cables, length as needed		
	Cable Q173DVCBL05M (length 0.5 m)	pieces	☐
	Cable Q173DVCBL1M (length 1.0 m)	pieces	
Battery unit Q170BAT	Number of Q172CPUN = Required number of Q170BAT	pieces	☐
Cable Q172J2BCBL☐M-B	Number of Q170BAT = Required number of connetion cables, length as needed		
	Cable Q172J2BCBL05M-B (length 0.5 m)	pieces	☐
	Cable Q172J2BCBL1M-B (length 1.0 m)	pieces	
	Cable Q172J2BCBL5M-B (length 5.0 m)	pieces	
Battery A6BAT	Number of Q170BAT and Q173DV = Number of batteries	pieces	☐
Manual pulse generators MR-HDP01	Installed manual pulse generators in the motion system	pieces	☐
Serial absolute synchronous encoder MR-HENC	Serial absolute synchronous encoder in use	pieces	☐
Encoder cable MR-JHSCBL☐	Number of installed encoders MR-HENC, distance between encoder and Q172EX, requirements (standard or long life)		
	Selected cable (type and number)		☐
SSCNET cable for connection between the servo amplifiers	Number of servo amplifiers in the system, distance between the servo amplifiers		
	SSCNET cable MR-J2HBUS05M (length 0.5 m)	pieces	☐
	SSCNET cable MR-J2HBUS1M (length 1.0 m)	pieces	
	SSCNET cable MR-J2HBUS5M (length 5.0 m)	pieces	
SSCNET Termination connector MR-A-TM	One termination connector is needed for each SSCNET line.	pieces	☐
PCMCIA card and connection cable	When you want to program the motion CPU via the SSCNET you need an additional card for your PC. The type of card (PCMCIA or ISA) depends on the type of PC used.		☐
ISA card and connection cable			
Software	MITSUBISHI ELECTRIC will assists you to find a specially tailored software for your application.		☐
Servo amplifier and servo motors	Please consult MITSUBISHI ELECTRIC for the selection of servo amplifiers and motors.		☐

AUDIN - 8, avenue de la malle - 51370 Saint Brice Courcelles - Tel : 03.26.04.20.21 - Fax : 03.26.04.28.20 - Web : http: www.audin.fr - Email : info@audin.fr

AUDIN
Composants & systèmes d'automatisme
7 bis rue de Tinqueux - 51100 Reims - France
Tel. +33(0)326042021 • Fax +33(0)326042820
http://www.audin.fr • e-mail info@audin.fr

Company: . . . . . .
Department: . . . . . .
Street: . . . . . .
Address: . . . . . .
Phone: . . . . . .
Fax: . . . . . .

Order declaration

Pos.	Number	Item (type)	Article number	Description	Remarks

Notes when ordering:
When ordering, please use only the type designations and order numbers shown in this catalogue.

A
Absolute synchronous encoder
description . . . 25
Dimensions . . . 27
Accessory . . . 24
Amplifier . . . 15
Application examples
programming . . . 20
SV13 instructions . . . 18
SV22 instructions . . . 19

C
Cable . . . 24
Cam curve programming . . . 23
Combination possibilities . . . 5
Connector . . . 25
Configuration . . . 6
Conveyor assembly . . . 18
CPUs
specifications . . . 10
overview and combination possibilities . . . 5

D
Design help . . . 28
Dimensions
accessory . . . 27
Motion Controller . . . 26

E
Encoder . . . 25
Event processing . . . 20

H
Hardware components . . . 8

I
Interface modules
Q172LX . . . 12
Q172EX . . . 13
Q173PX . . . 14
dimensions . . . 26

M
Manual pulse generator MR-HDP01
description . . . 25
dimensions . . . 27
Manual pulse generator interface module Q173PX
specifications . . . 14
dimensions . . . 26
Mechanical elements (software) . . . 23
Motion Controller
CPUs . . . 10
overview . . . 5
Motion SFC programming . . . 21

O
Operating system software . . . 17

P
PLC CPU programming . . . 22
Programming
application ranges . . . 17
components . . . 17
screenshots . . . 20
Motion SFC . . . 21
Programm start . . . 20

S
Serial absolute synchronous interface module Q172EX
description . . . 13
dimensions . . . 26
Servo amplifiers . . . 15
Servo external signals interface module Q172LX
description . . . 12
dimensions . . . 26
Servo motors . . . 15
SFC (Sequential Function Chart) . . . 21
Software
packages . . . 17
overview . . . 16
screenshots . . . 20
Specifications
Motion Controller overview . . . 5
Motion CPUs . . . 10
system modules . . . 12
software . . . 17
System requirements . . . 16
System configuration (software) . . . 22
System overview . . . 5

V
Virtual mechanical system environment . . . 19

AUDIN - 8, avenue de la malle - 51370 Saint Brice Courcelles - Tel : 03.26.04.20.21 - Fax : 03.26.04.28.20 - Web : http: www.audin.fr - Email : info@audin.fr

HEADQUARTERS

MITSUBISHI ELECTRIC EUROPE B.V. — **EUROPE**
German Branch
Gothaer Straße 8
D-40880 Ratingen
Phone: +49 (0) 21 02 / 486-0
Fax: +49 (0) 21 02 / 4 86-1 12
e mail: megfamail@meg.mee.com

MITSUBISHI ELECTRIC EUROPE B.V. — **FRANCE**
French Branch
25, Boulevard des Bouvets
F-92741 Nanterre Cedex
Phone: +33 1 55 68 55 68
Fax: +33 1 55 68 56 85
e mail: factory.automation@fra.mee.com

MITSUBISHI ELECTRIC . EUROPE B.V — **ITALY**
Italian Branch
Via Paracelso 12
I-20041 Agrate Brianza (MI)
Phone: +39 (0) 39 / 60 53 1
Fax: +39 (0) 39 / 60 53 312
e mail: factory.automation@it.mee.com

MITSUBISHI ELECTRIC EUROPE B.V. — **SPAIN**
Spanish Branch
Carretera de Rubí 76-80
E-08190 Sant Cugat del Vallés
Phone: +34 9 3 / 565 3131
Fax: +34 9 3 / 589 2948
e mail: —

MITSUBISHI ELECTRIC EUROPE B.V. — **UK**
UK Branch
Travellers Lane
GB-Hatfield Herts. AL10 8 XB
Phone: +44 (0) 1707 / 27 61 00
Fax: +44 (0) 1707 / 27 86 95

MITSUBISHI ELECTRIC CORPORATION — **JAPAN**
Office Tower "Z" 14 F
8-12,1 chome, Harumi Chuo-Ku
Tokyo 104-6212
Phone: +81 3 / 622 160 60
Fax: +81 3 / 622 160 75

MITSUBISHI ELECTRIC AUTOMATION — **USA**
500 Corporate Woods Parkway
Vernon Hills, Illinois 60061
Phone: +1 (0) 847 / 478 21 00
Fax: +1 (0) 847 / 478 22 83

EUROPEAN REPRESENTATIVES

GEVA — **AUSTRIA**
Wiener Straße 89
A-2500 Baden
Phone: +43 (0) 2252 / 85 55 20
Fax: +43 (0) 2252 / 488 60
e mail: office@geva.at

TEHNIKON — **BELARUS**
Oktjabrskaya 16/5, Ap 704
BY-220030 Minsk
Phone: +375 (0)17/ 2275704
Fax: +375 (0)17/ 2276669
e mail: tehnikon@belsonet.net

Getronics — **BELGIUM**
Industrial Automation B.V.
Pontbeeklaan 43
B-1731 Asse-Zellik
Phone: +32 (0) 2 / 4 67 17 51
Fax: +32 (0) 2 / 4 67 17 45
e mail: infoautomation@getronics.com

TELECON CO. — **BULGARIA**
4, A. Ljapchev Blvd.
BG-1756 Sofia
Phone: +359 (0) 2 / 97 44 05 8
Fax: +359 (0) 2 / 97 44 06 1
e mail: —

INEA CR d.o.o. — **CROATIA**
Drvinje 63
HR-10000 Zagreb
Phone: +385 (0) 1/ 3667140
Fax: +385 (0) 1/ 3667140
e mail: —

AutoCont — **CZECHIA**
Control Systems s.r.o.
Nemocnicni 12
CZ-70200 Ostrava 2
Phone: +420 59 / 615 21 11
Fax: +420 59 / 615 25 62
e mail: consys@autocont.cz

louis poulsen — **DENMARK**
industri & automation
Geminivej 32
DK-2670 Greve
Phone: +45 (0) 43 / 95 95 95
Fax: +45 (0) 43 / 95 95 91
e mail: lpia@lpmail.com

UTU Elektrotehnika AS — **ESTONIA**
Pärnu mnt. 160i
EE-11317 Tallinn
Phone: +372 (0) 6 / 51 72 80
Fax: +372 (0) 6 / 51 72 88
e mail: utu@utu.ee

Provendor Oy — **FINLAND**
Teljänkatu 8 A 3
FIN-28130 Pori
Phone: +358 (0) 2 / 522 3300
Fax: +358 (0) 2 / 522 3322
e mail: —

UTECO A.B.E.E. — **GREECE**
5, Mavrogenous Str.
GR-18542 Piraeus
Phone: +30 10 / 42 10 050
Fax: +30 10 / 42 12 033
e mail: uteco@uteco.gr

Meltrade Automatika Kft. — **HUNGARY**
55, Harmat St.
HU-1105 Budapest
Phone: +36 (0)1 / 2605 602
Fax: +36 (0)1 / 2605 602
e mail: office@meltrade.hu

EUROPEAN REPRESENTATIVES

MITSUBISHI ELECTRIC EUROPE B.V. – Irish Branch — **IRELAND**
Westgate Business Park
Ballymount
IRL-Dublin 24
Phone: +353 (0) 1 / 419 88 00
Fax: +353 (0) 1 / 419 88 90
e mail: sales.info@meir.mee.com

Intehsis Srl — **MOLDOVA**
Cuza-Voda 36/1-81
MD-2061 Chisinau
Phone: +373 (0) 2 / 562 263
Fax: +373 (0) 2 / 562 263
e mail: intehsis@mdl.net

Getronics — **NETHERLANDS**
Industrial Automation B.V.
Donauweg 2 B
1043 AJ Amsterdam
Phone: +31 (0) 20 / 587 6700
Fax: +31 (0) 20 / 587 6839
e mail: info.gia@getronics.com

MPL Technology Sp. z o.o. — **POLAND**
ul. Sliczna 36
PL-31-444 Kraków
Phone: +48 (0) 12 / 632 28 85
Fax: +48 (0) 12 / 632 47 82
e mail: krakow@mpl.pl

Sirius Trading & Services srl — **ROMANIA**
Bd. Lacul Tei nr. 1 B
RO-72301 Bucuresti 2
Phone: +40 (0) 21 / 201 7147
Fax: +40 (0) 21 / 201 7148
e mail: sirius_t_s@fx.ro

INEA d.o.o. — **SLOVENIA**
Stegne 11
SI-1000 Ljubljana
Phone: +386 (0) 1- 513 8100
Fax: +386 (0) 1- 513 8170
e mail: inea@inea.si

ARATRON AB — **SWEDEN**
Box 20087
S-16102 Bromma
Phone: +46 (0) 8 / 40 41 600
Fax: +46 (0) 8 / 98 42 81
e mail: —

ECONOTEC AG — **SWITZERLAND**
Postfach 282
CH-8309 Nürensdorf
Phone: +41 (0) 1 / 838 48 11
Fax: +41 (0) 1 / 838 48 12
e mail: info@econotec.ch

GTS — **TURKEY**
Darülaceze Cad. No. 43 KAT. 2
TR-80270 Okmeydani-Istanbul
Phone: +90 (0) 212 / 320 1640
Fax: +90 (0) 212 / 320 1649
e mail: gts@turk.net

CSC Automation Ltd. — **UKRAINE**
15, M. Raskovoyi St., Floor 10,
Office 1010
U-02002 Kiev
Phone: +380 (0) 44 / 238 83 16
Fax: +380 (0) 44 / 238 83 17
e mail: csc-a@csc-a.kiev.ua

EURASIAN REPRESENTATIVES

Avtomatika Sever — **RUSSIA**
Krapivnij Per. 5, Of. 402
RU-194044 St Petersburg
Phone: +7 812 / 1183 238
Fax: +7 812 / 3039 648
e mail: pav@avtsev.spb.ru

CONSYS — **RUSSIA**
Promyshlennaya St. 42
RU-198099 St Petersburg
Phone: +7 812 / 325 36 53
Fax: +7 812 / 325 36 53
e mail: consys@consys.spb.ru

ELEKTROSTYLE — **RUSSIA**
Ul Garschina 11
RU-140070 Moscowskaja Oblast
Phone: +7 095 / 261 3808
Fax: +7 095 / 261 3808
e mail: —

ICOS — **RUSSIA**
Ryazanskij Prospekt, 8a, Office 100
RU-109428 Moscow
Phone: +7 095 / 232 - 0207
Fax: +7 095 / 232 - 0327
e mail: mail@icos.ru

NPP Uralelektra — **RUSSIA**
Sverdlova 11A
RU-620027 Ekaterinburg
Phone: +7 34 32 / 53 27 45
Fax: +7 34 32 / 53 27 45
e mail: elektra@etel.ru

STC Drive Technique — **RUSSIA**
Poslannikov per., 9, str.1
RU-107005 Moscow
Phone: +7 095 / 786 21 00
Fax: +7 095 / 786 21 01
e mail: info@privod.ru

MIDDLE EAST REPRESENTATIVE

SHERF Motion Techn. LTD — **ISRAEL**
Rehov Hamerkava 19
IL-58851 Holon
Phone: +972 (0) 3 / 559 54 62
Fax: +972 (0) 3 / 556 01 82
e mail: —

AFRICAN REPRESENTATIVE

CBI Ltd — **SOUTHAFRICA**
Private Bag 2016
ZA-1600 Isando
Phone: +27 (0) 11/ 928 2000
Fax: +27 (0) 11/ 392 2354
e mail: cbi@cbi.co.za

Specifications subject to change without notice
Art.no. 143712-B, Printed in Germany 04.05

AUDIN - 8 , avenue de la malle - 51370 Saint Brice Courcelles - Tel : 03.26.04.20.21 - Fax : 03.26.04.28.20 - Web : http: www.audin.fr - Email : info@audin.fr